8235 STUDLESS

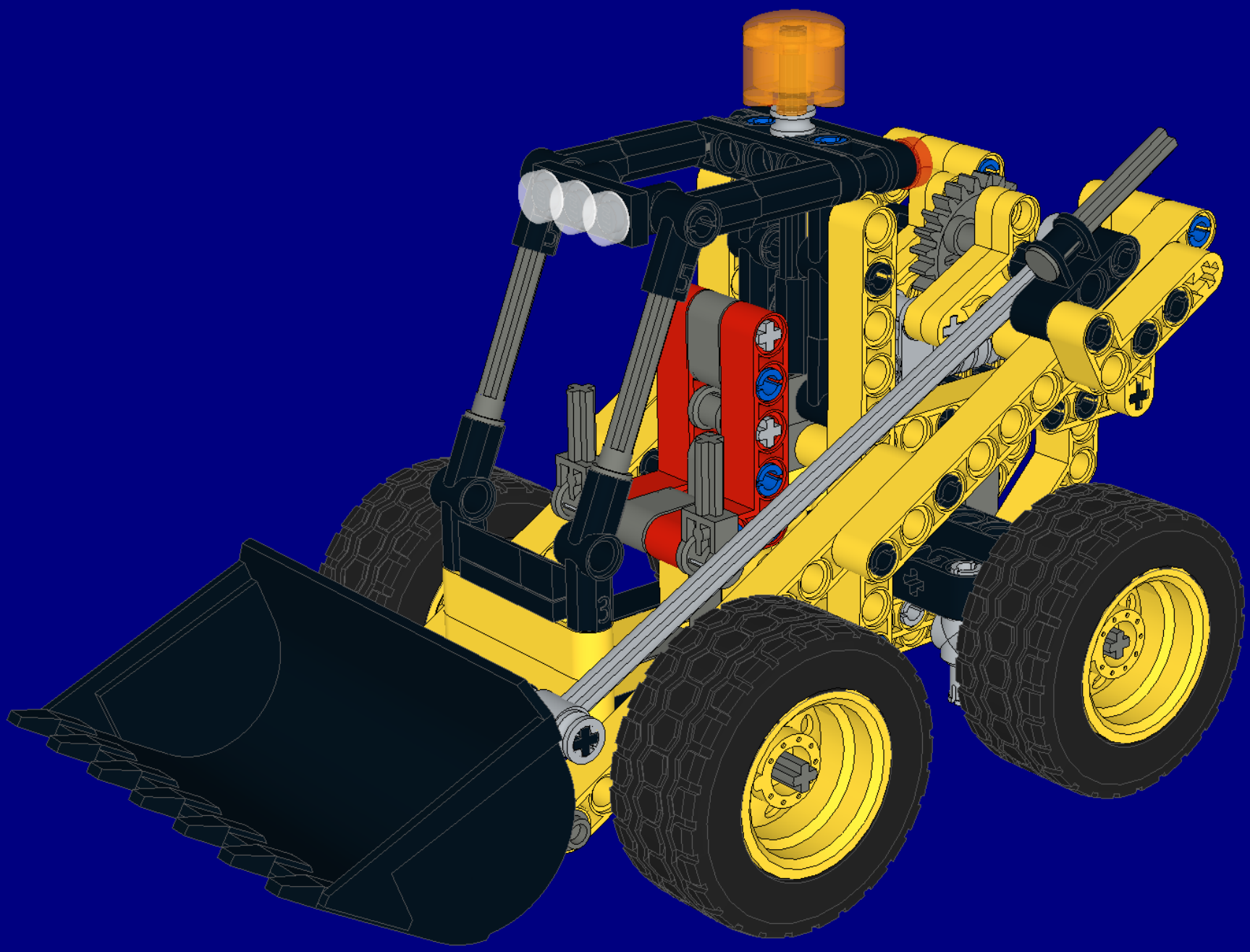

© M_Longer 2016

m-longer.blogspot.com

1

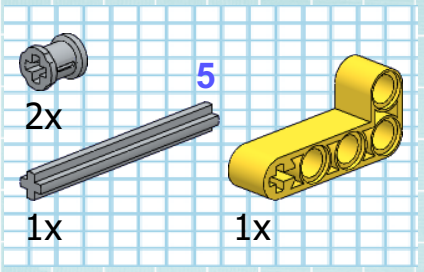

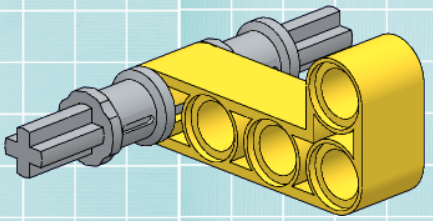

2

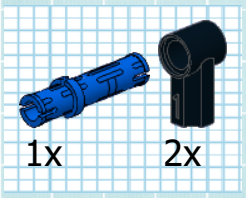

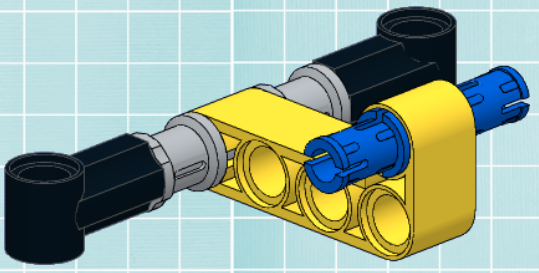

3

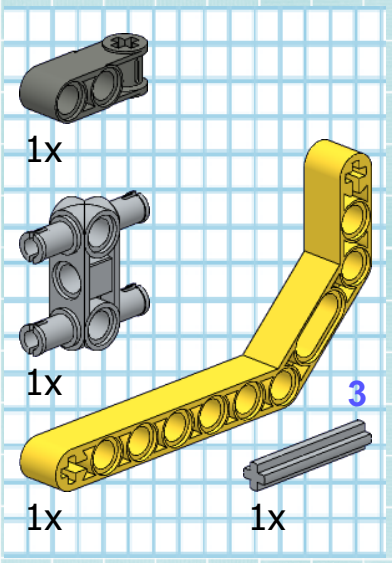

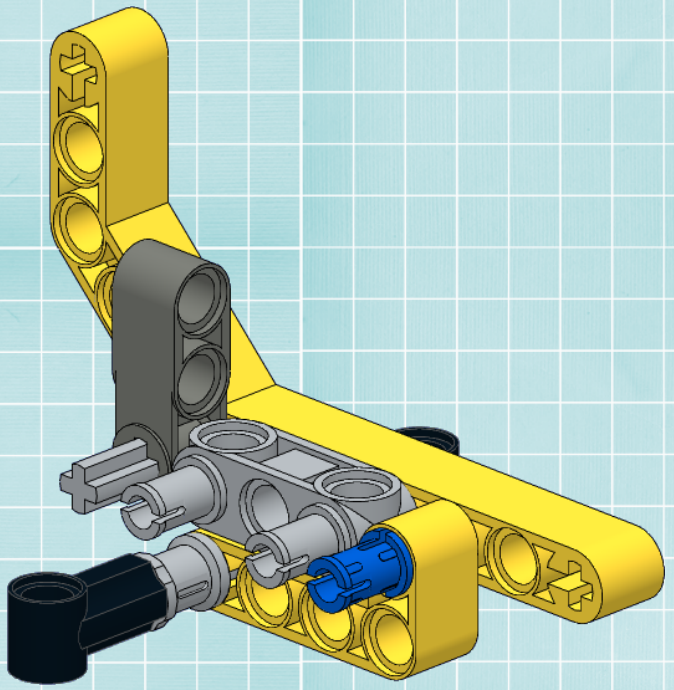

4

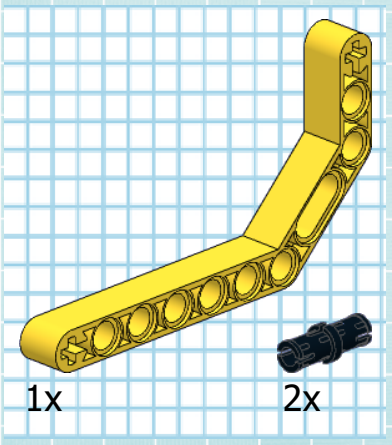

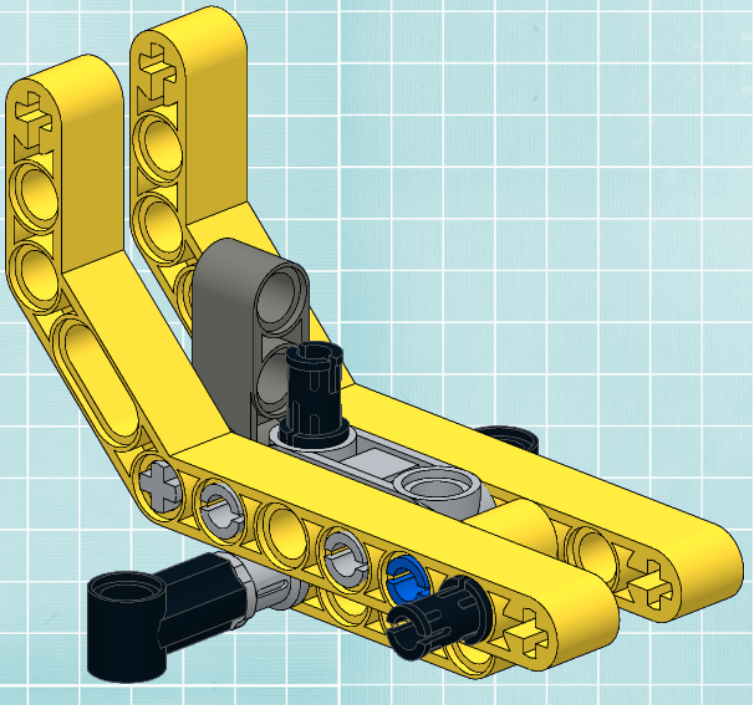

© M_Longer 2016

5

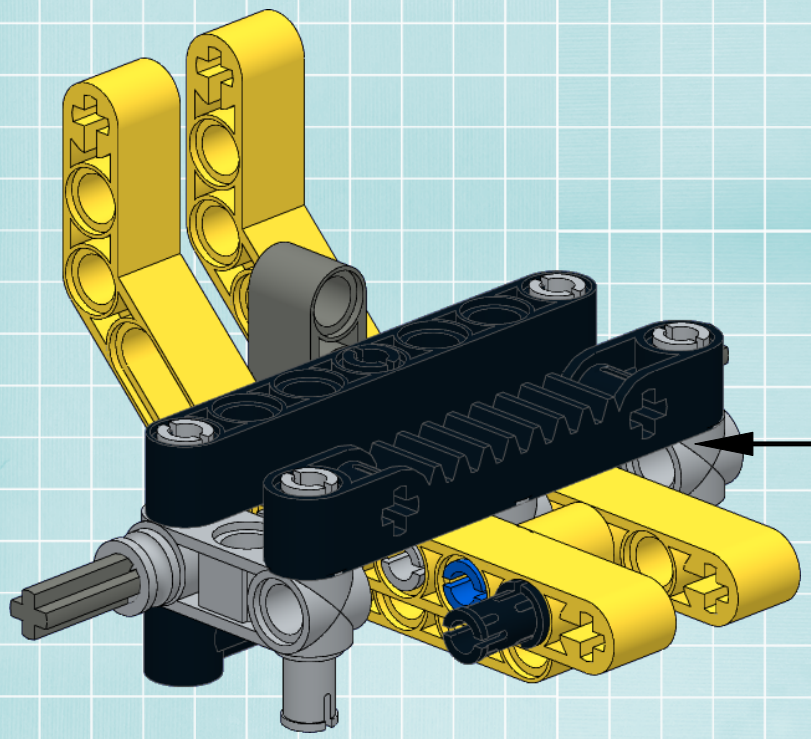

1

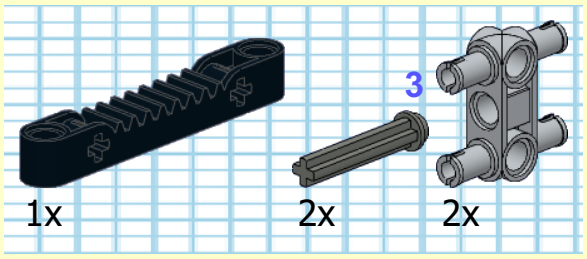

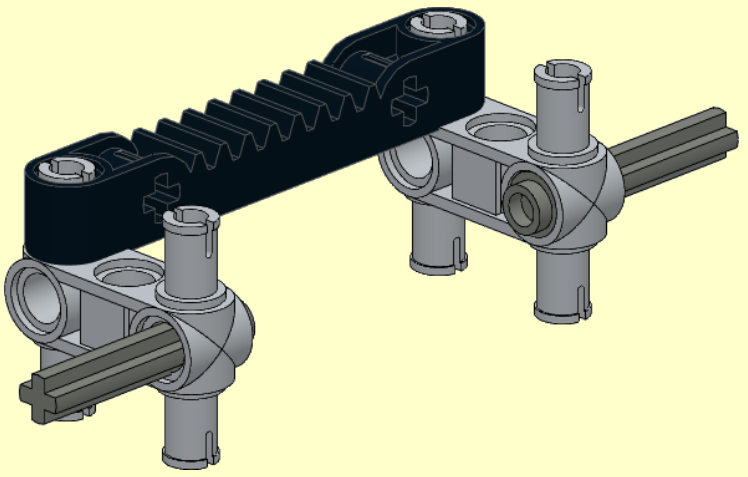

2

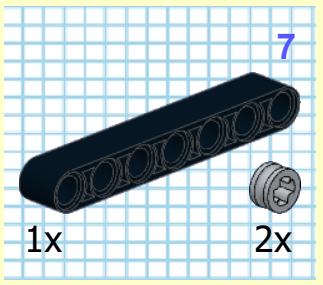

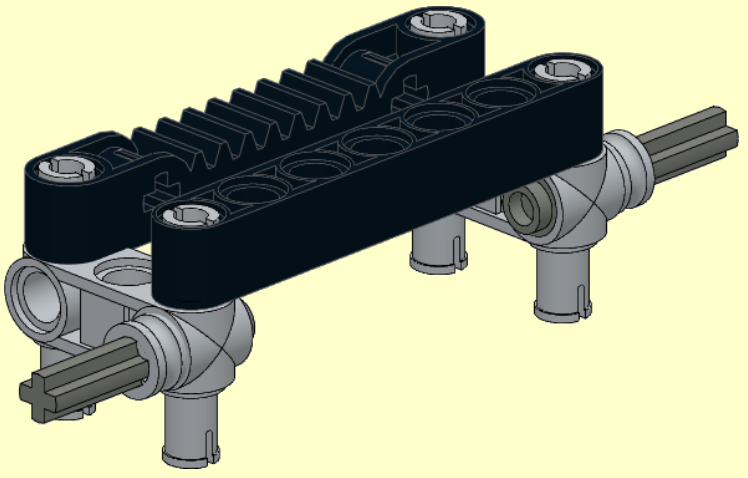

© M_Longer 2016

6

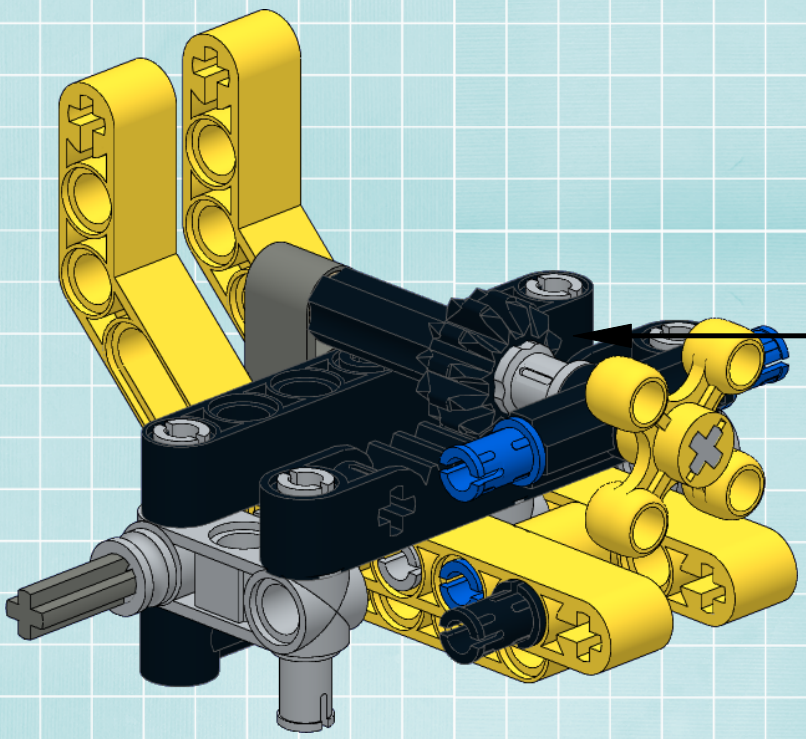

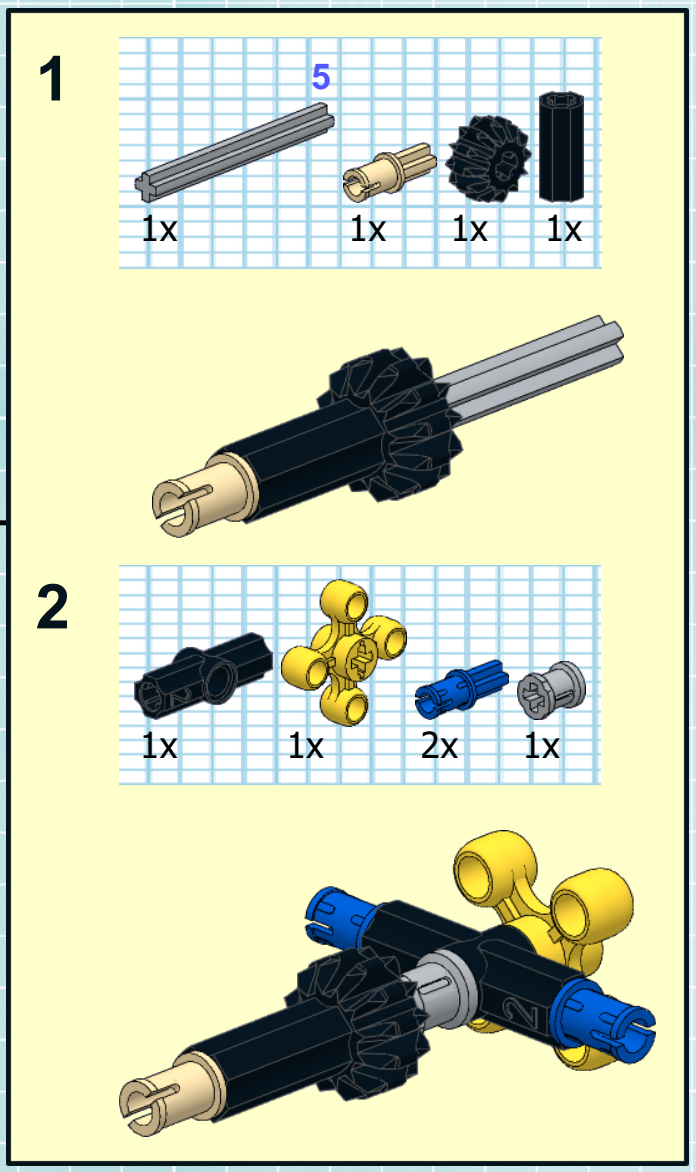

© M_Longer 2016

1

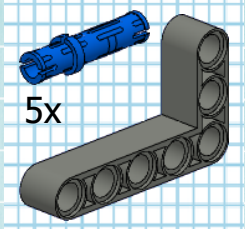

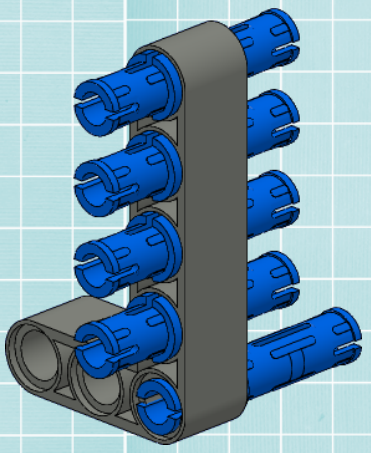

2

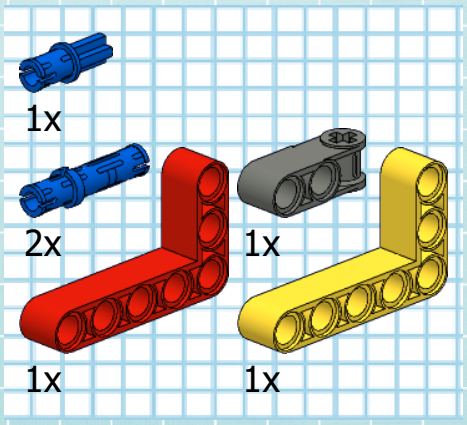

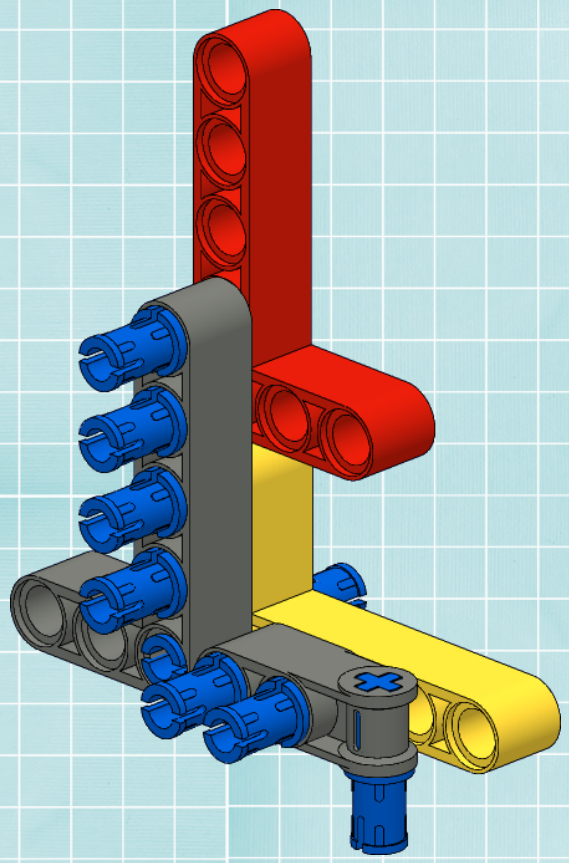

3

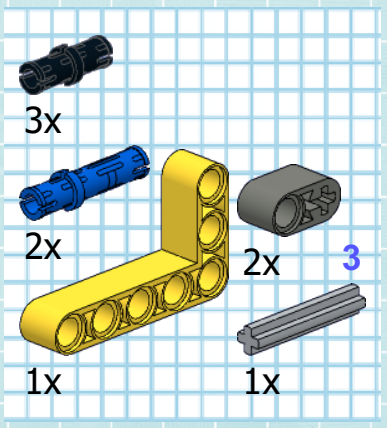

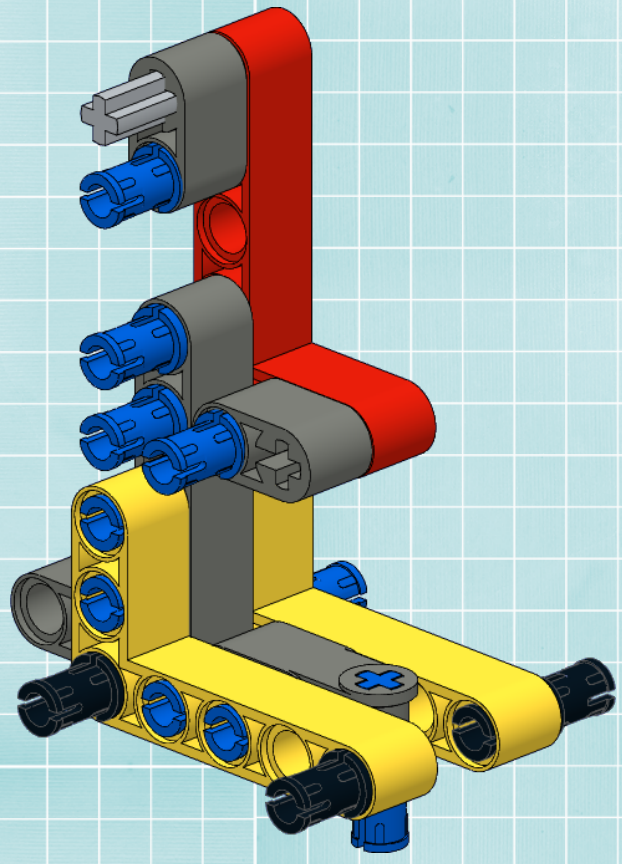

© M_Longer 2016

4

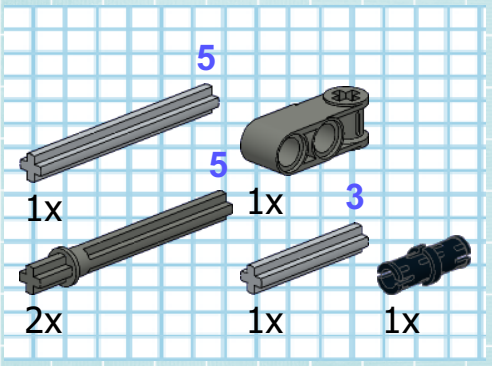

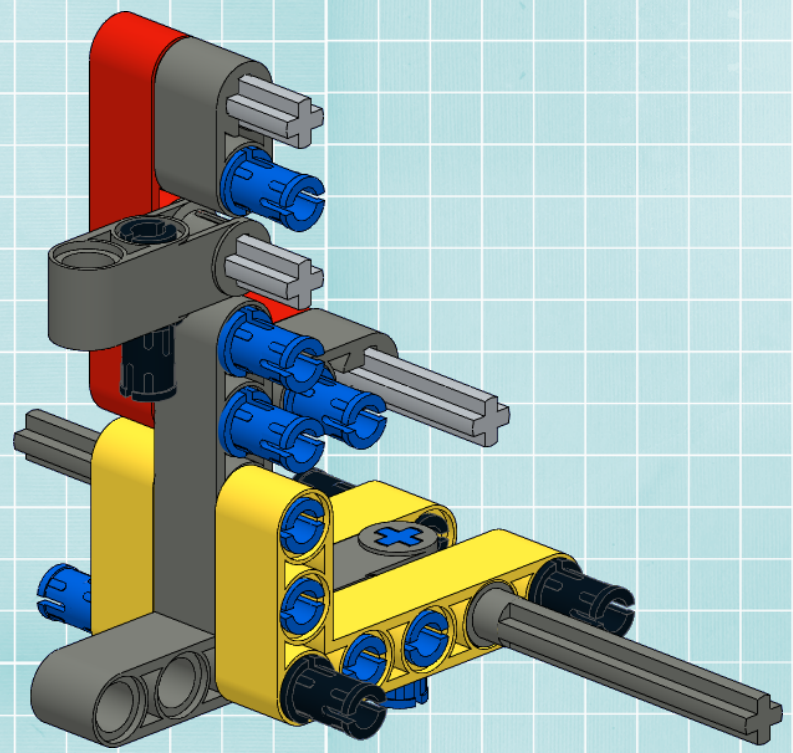

5

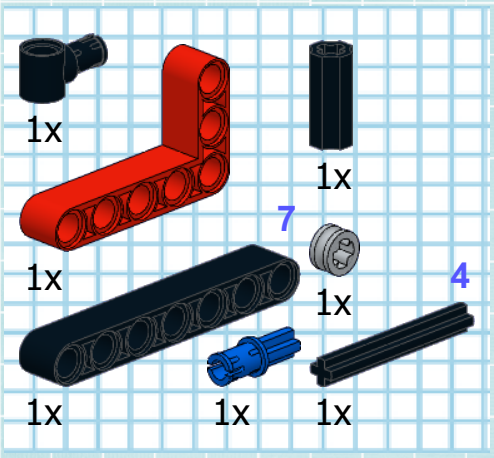

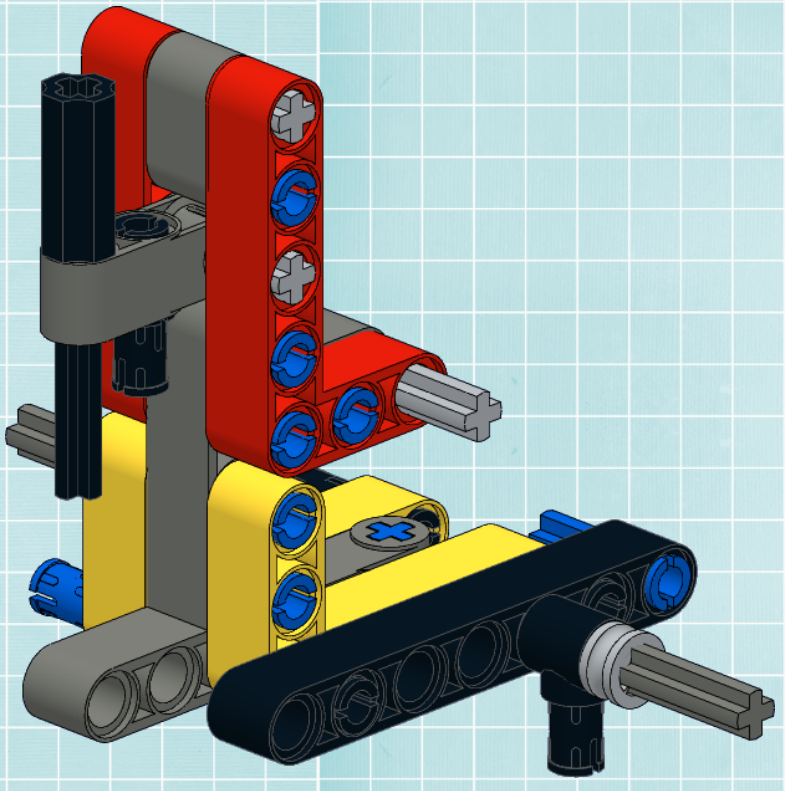

© M_Longer 2016

6

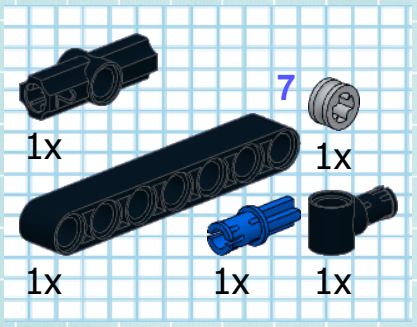

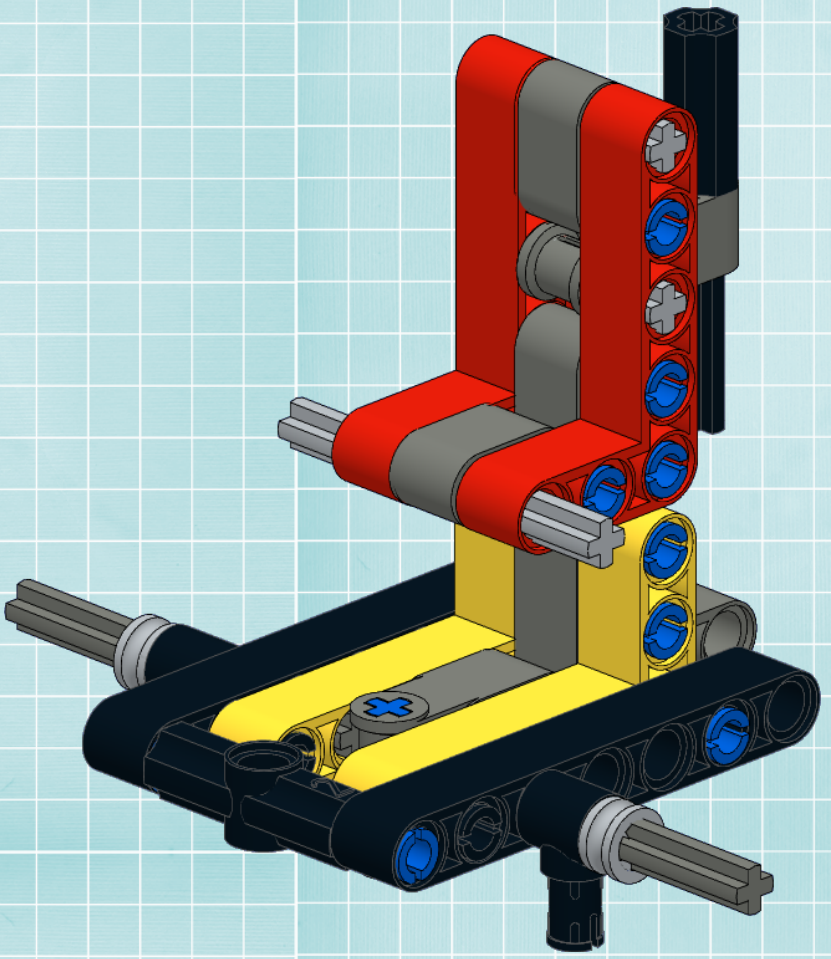

7

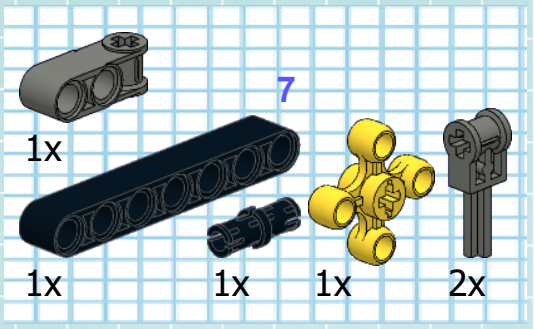

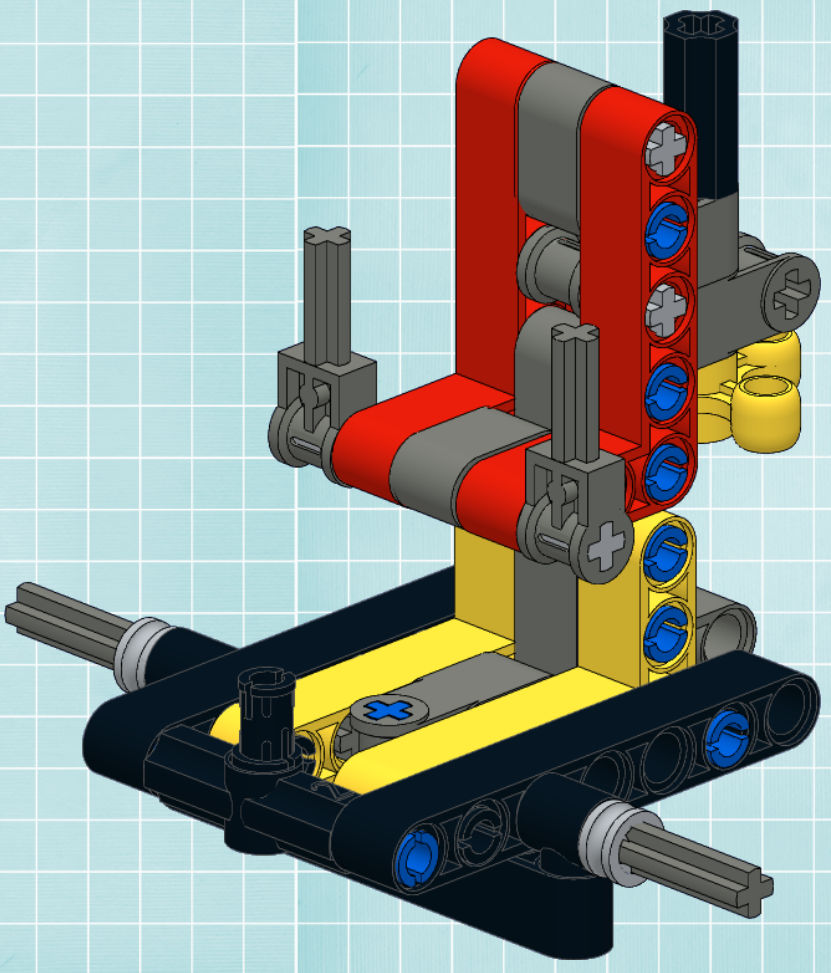

© M_Longer 2016

7

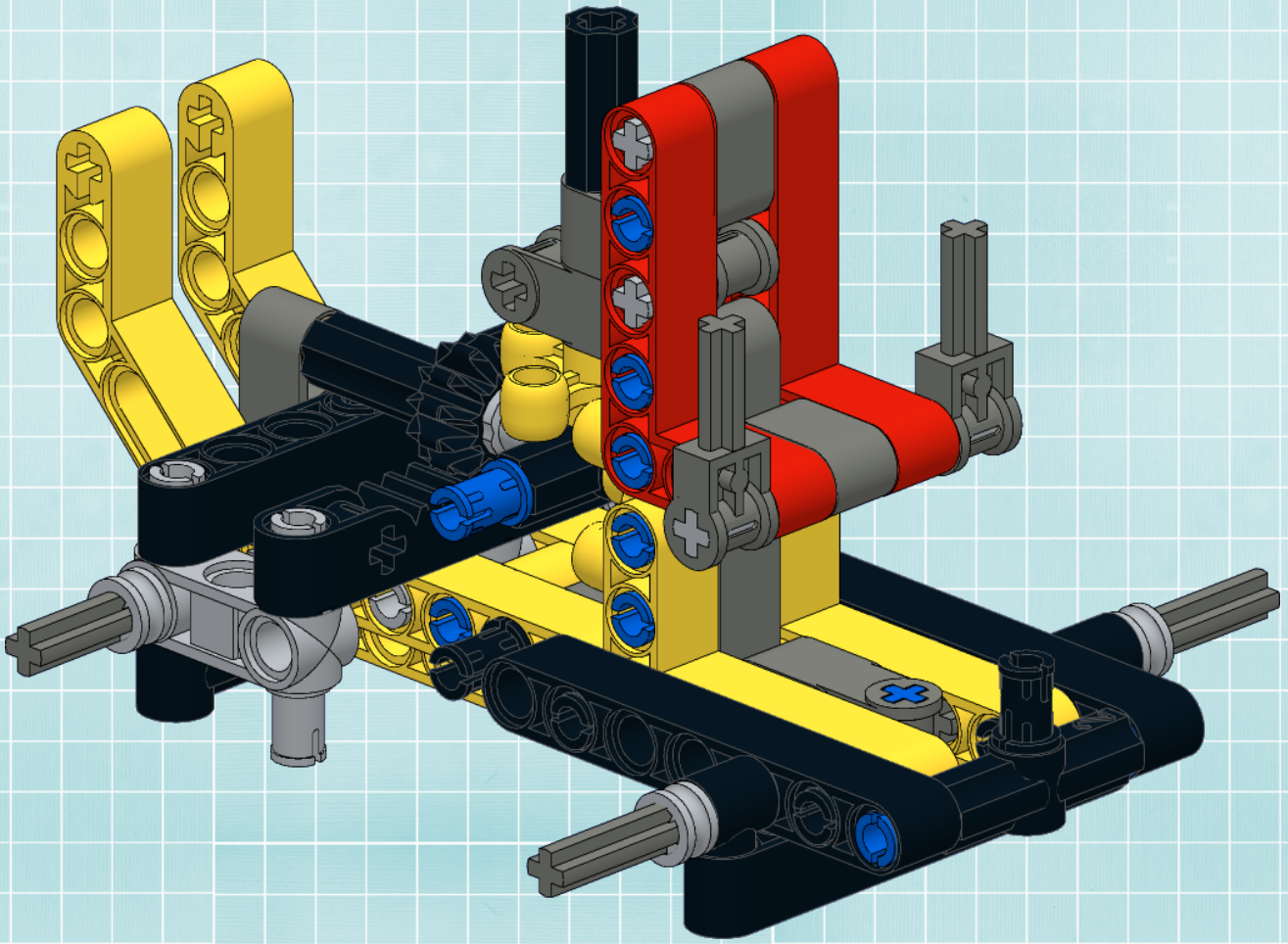

8

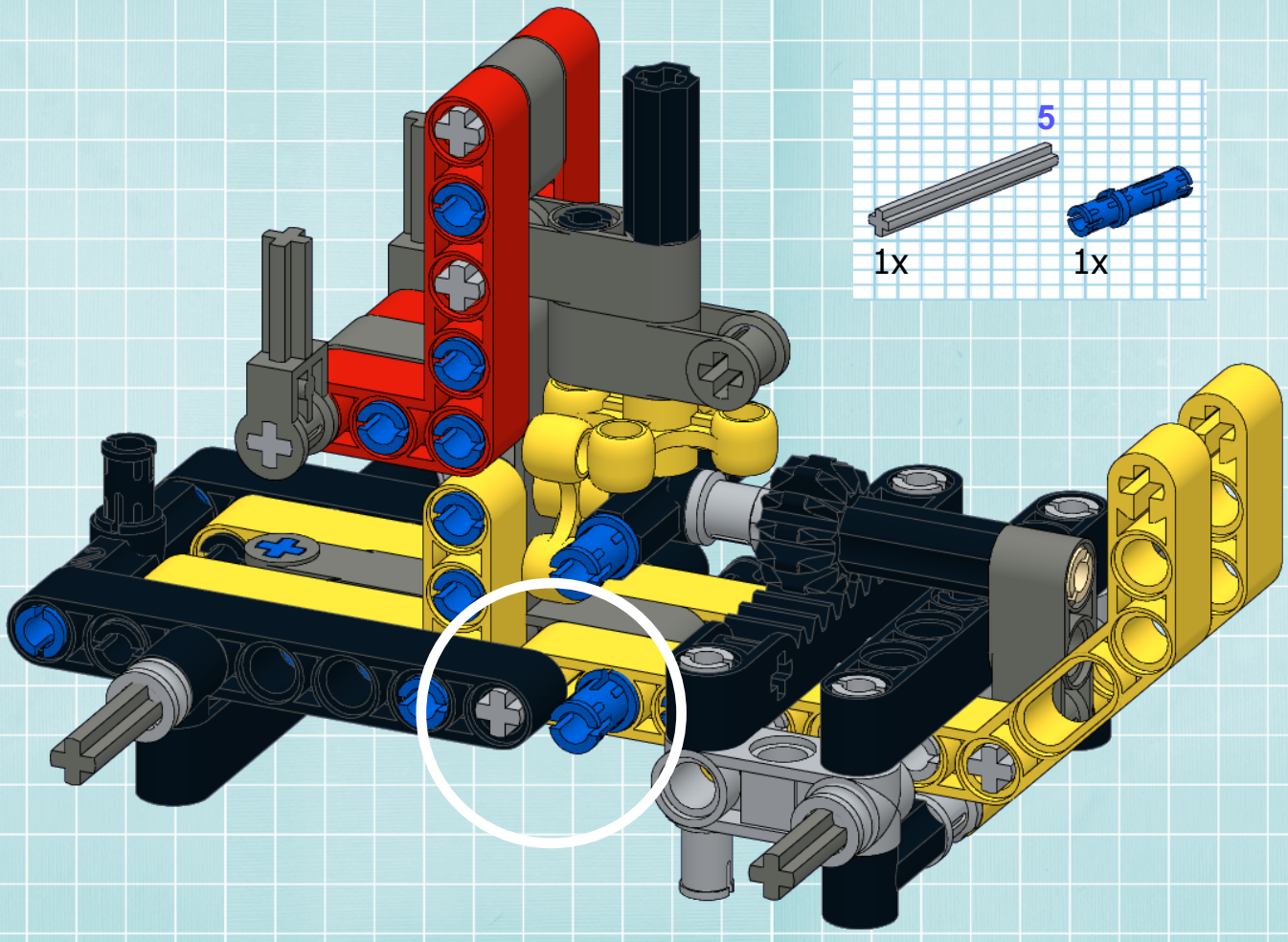

© M_Longer 2016

1

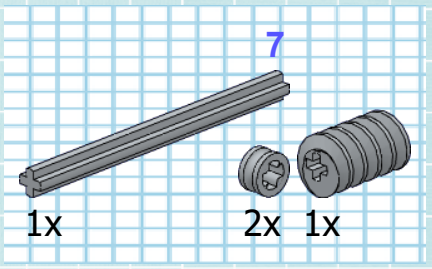

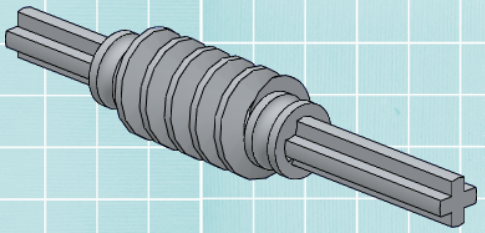

2

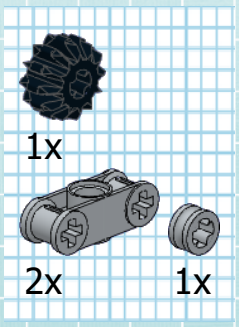

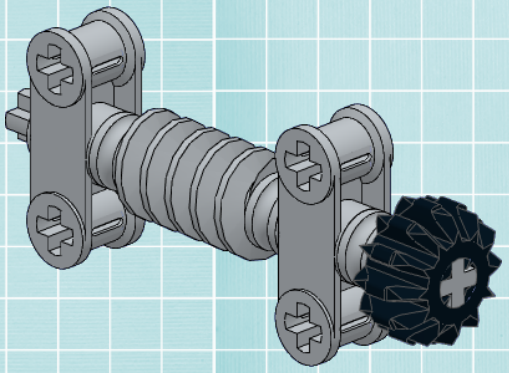

3

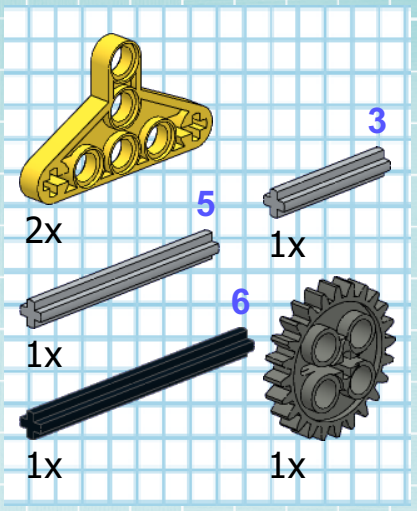

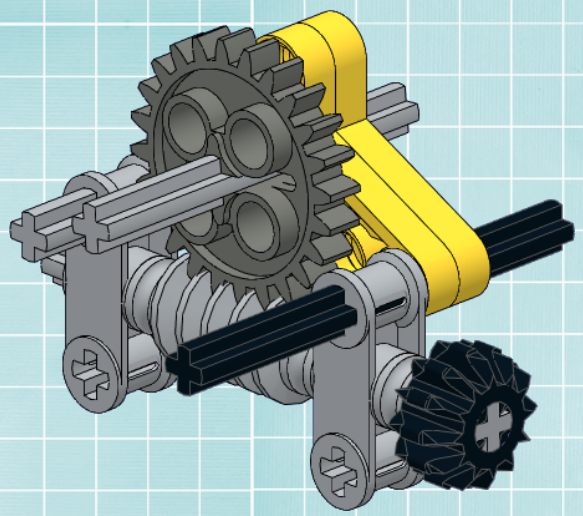

4

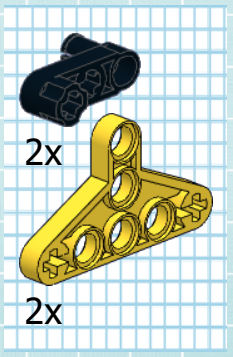

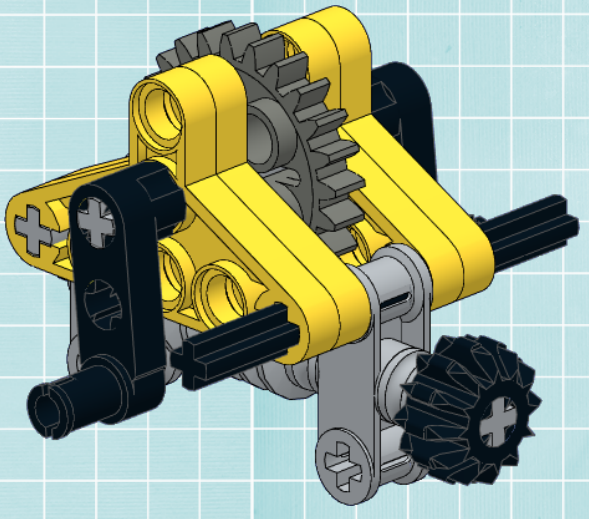

© M_Longer 2016

9

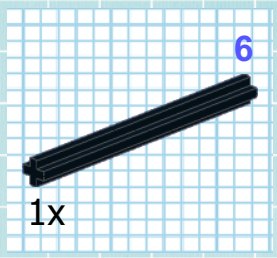

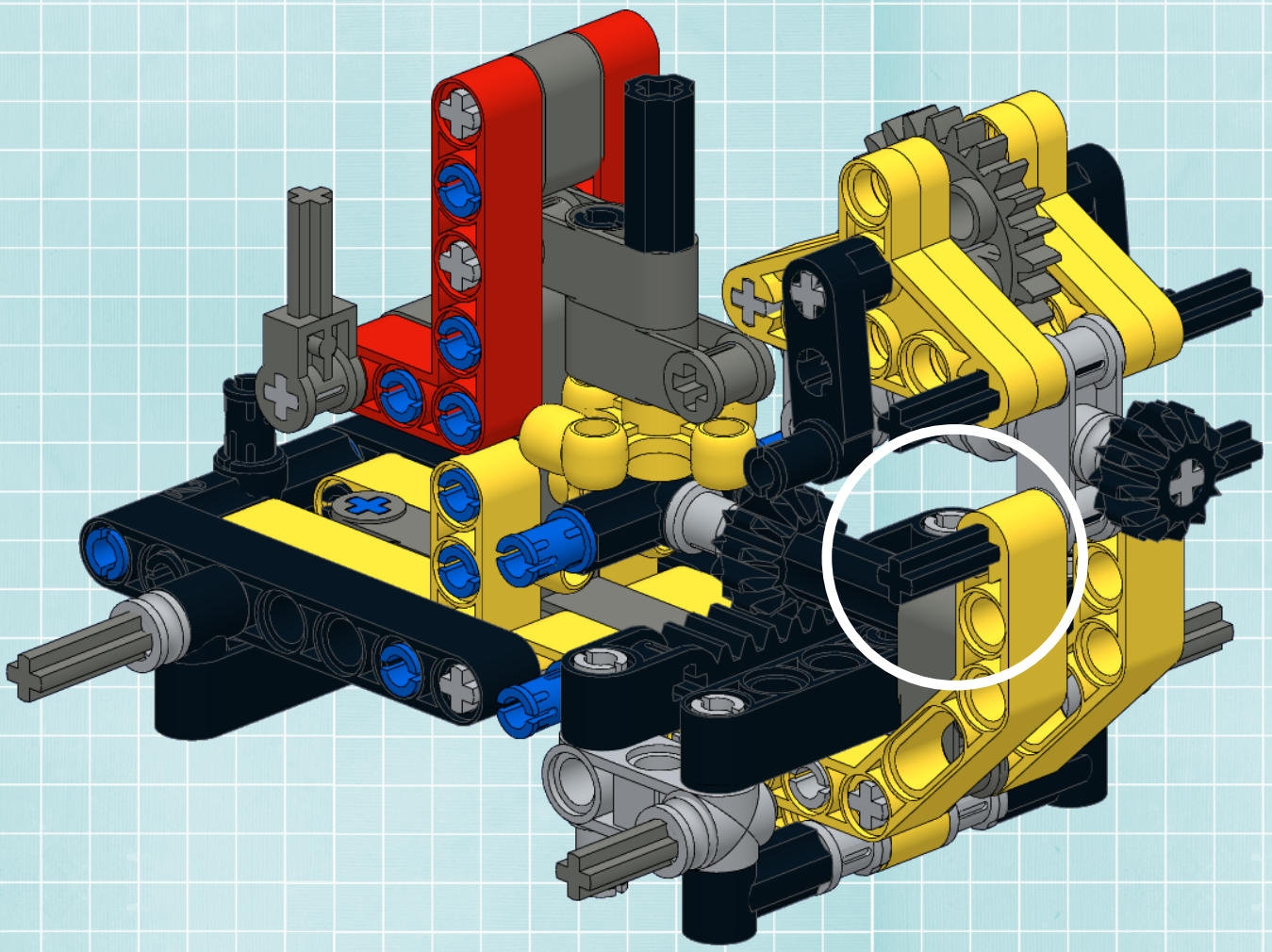

© M_Longer 2016

10

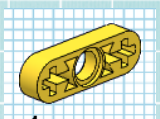

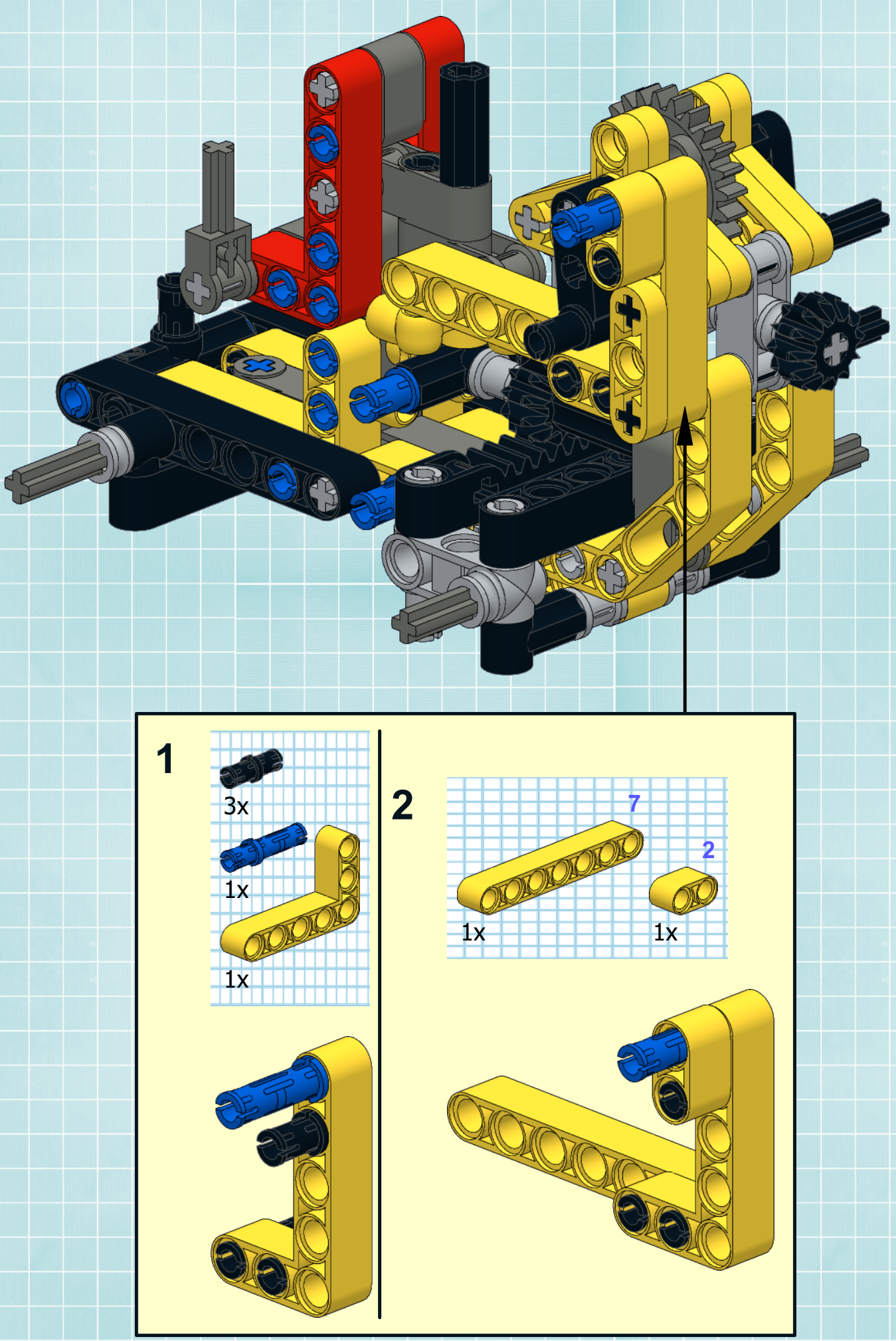

© M_Longer 2016

11

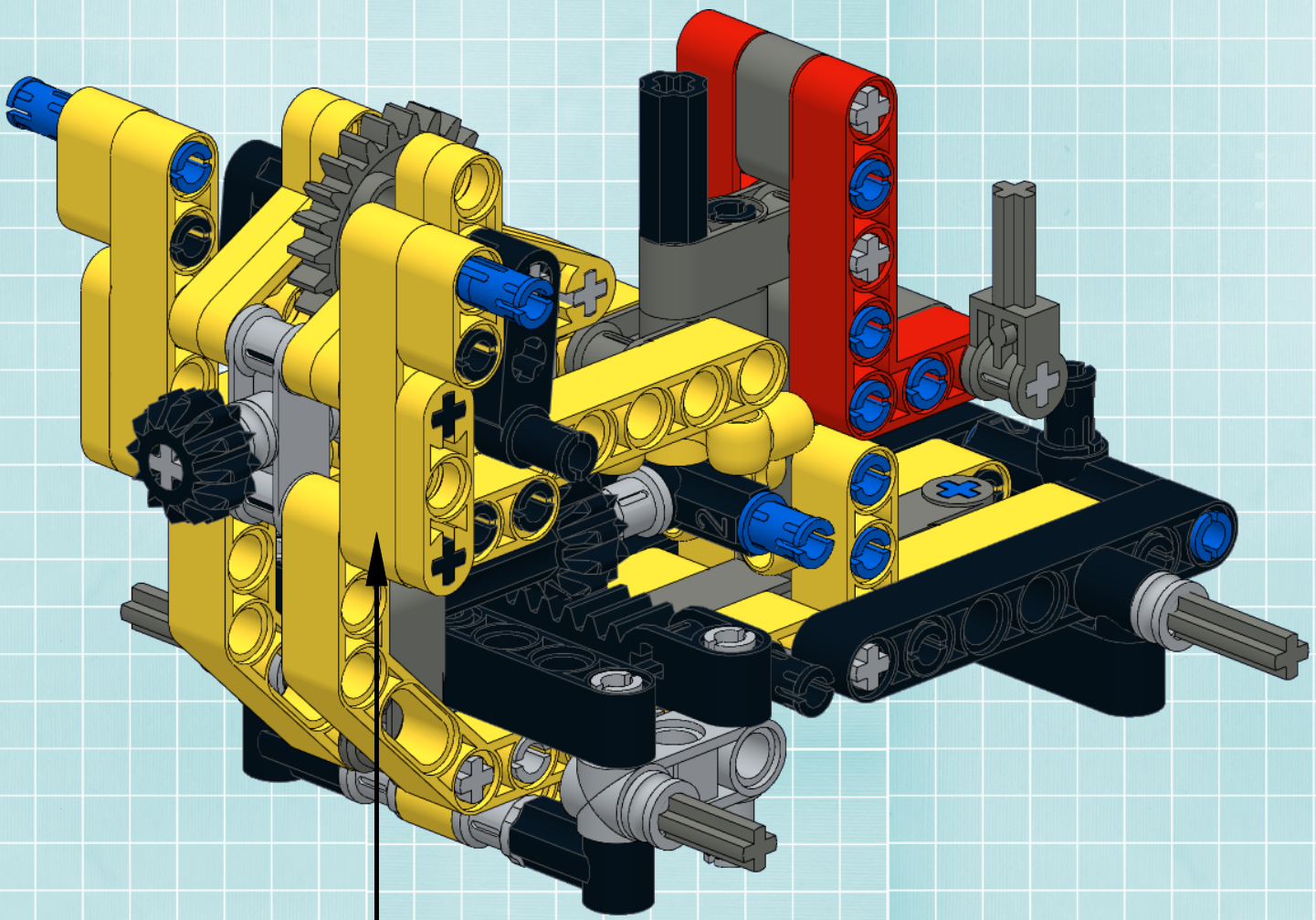

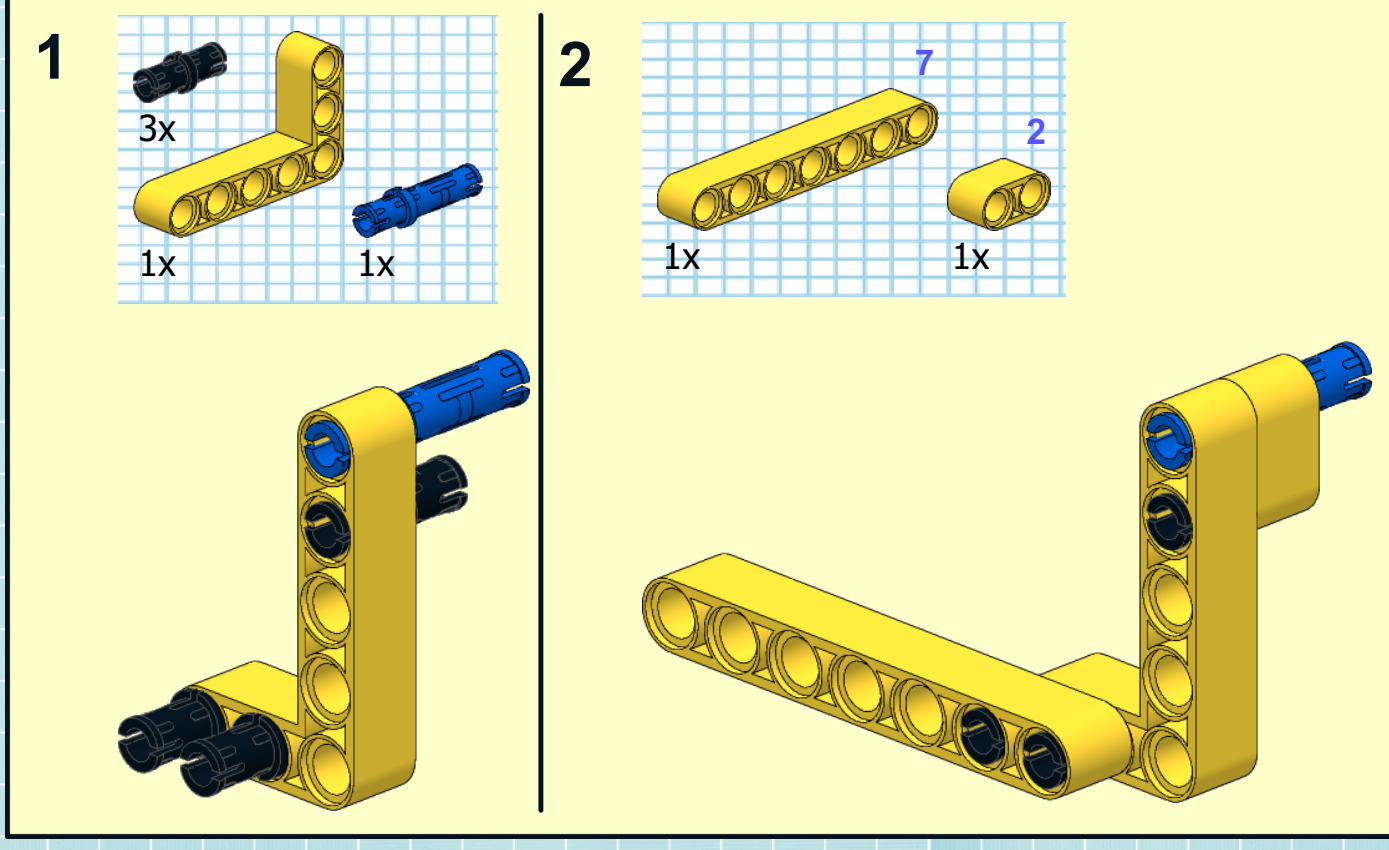

© M_Longer 2016

12

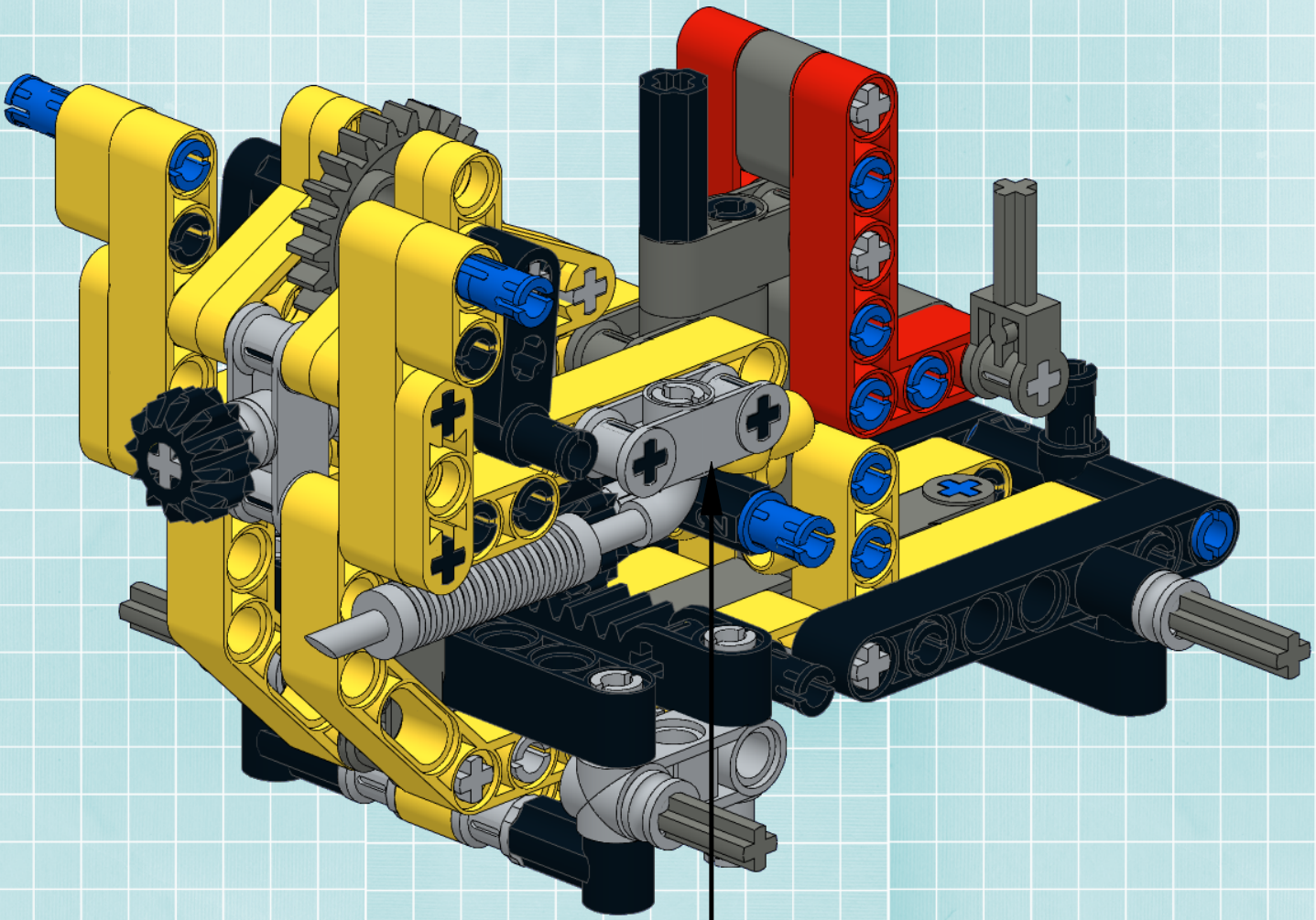

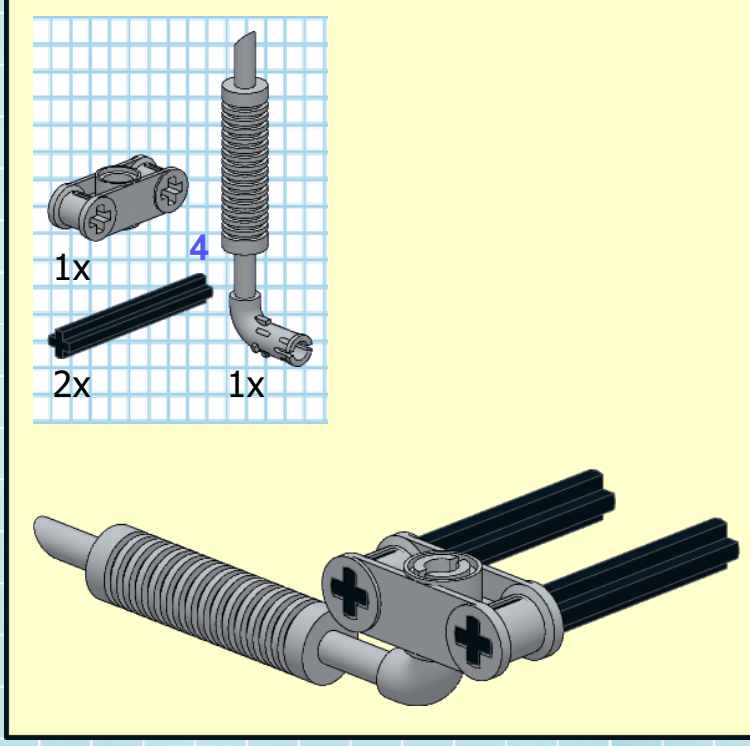

© M_Longer 2016

13

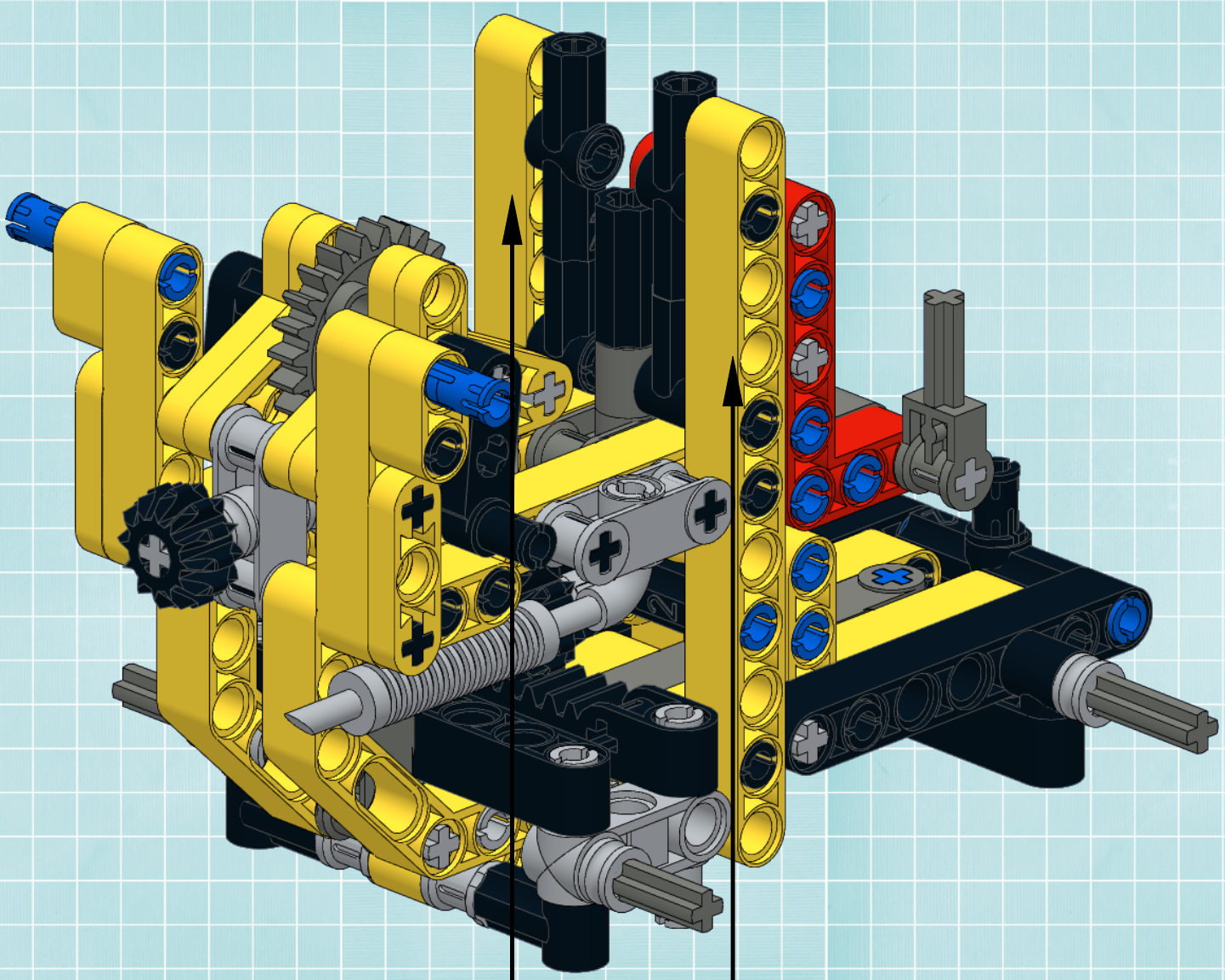

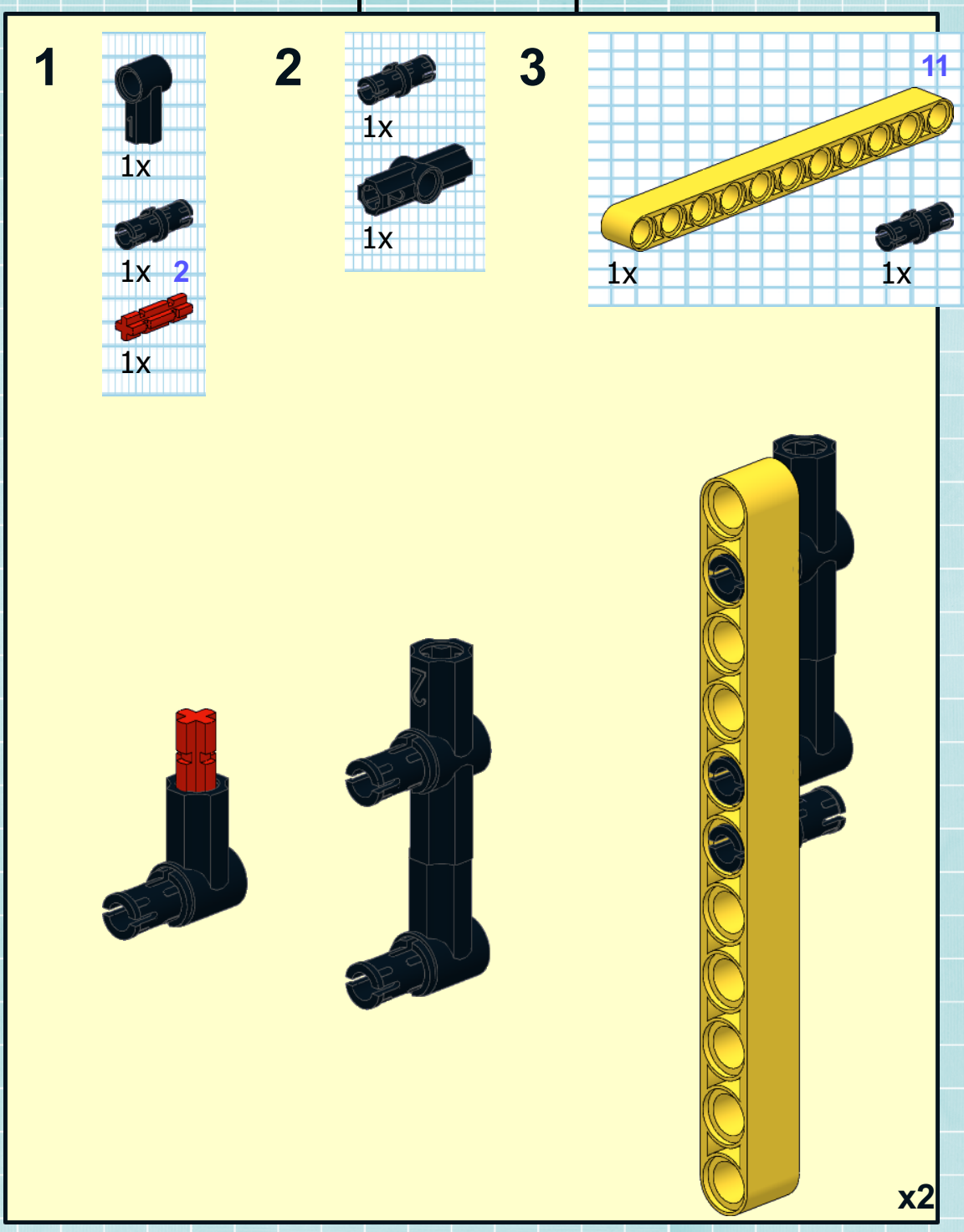

1

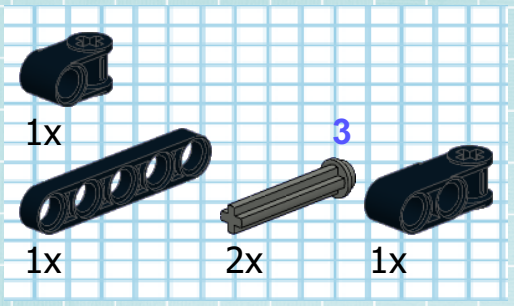

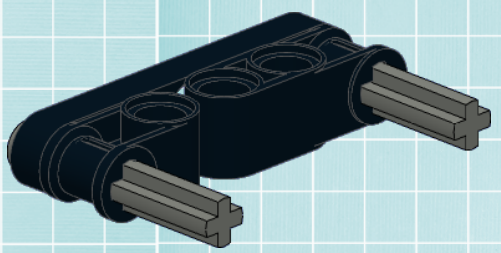

2

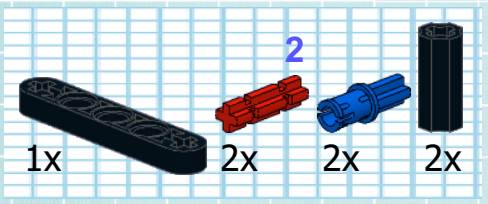

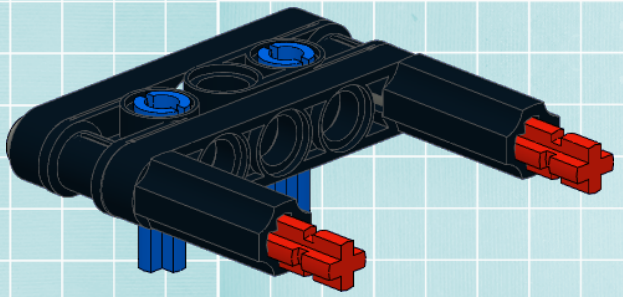

3

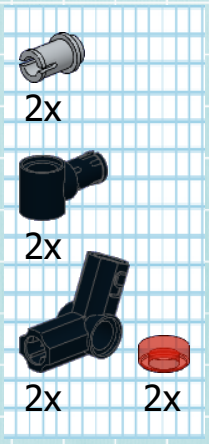

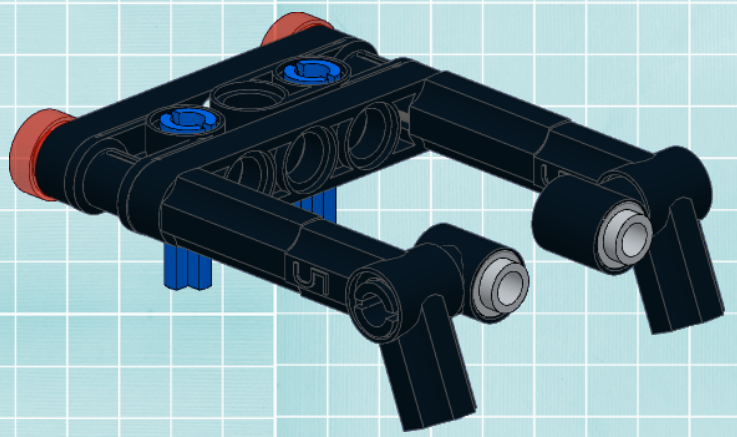

4

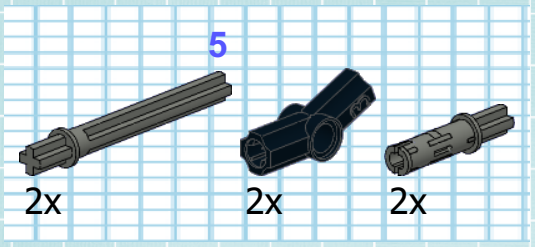

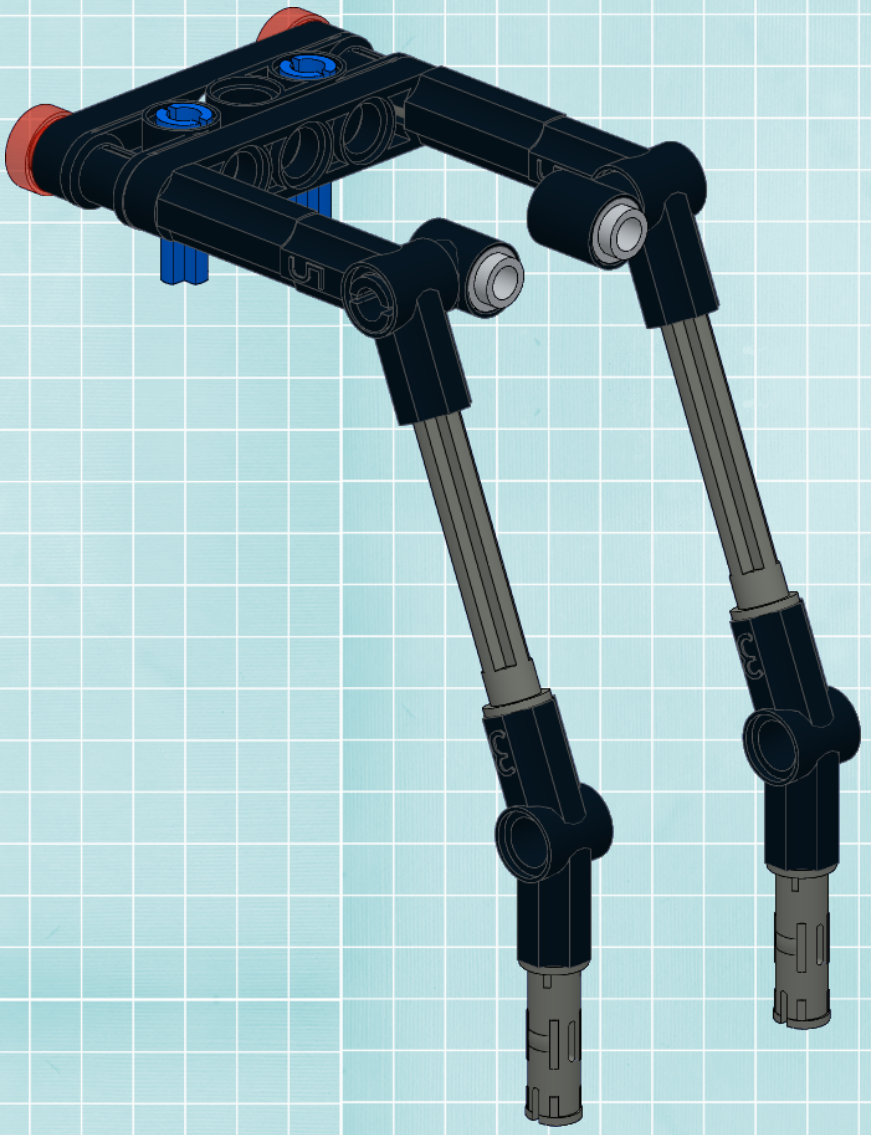

© M_Longer 2016

5

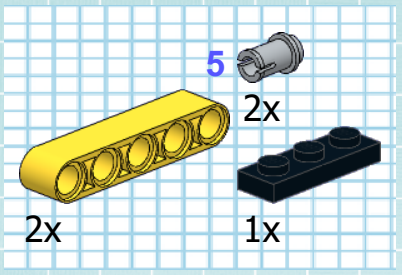

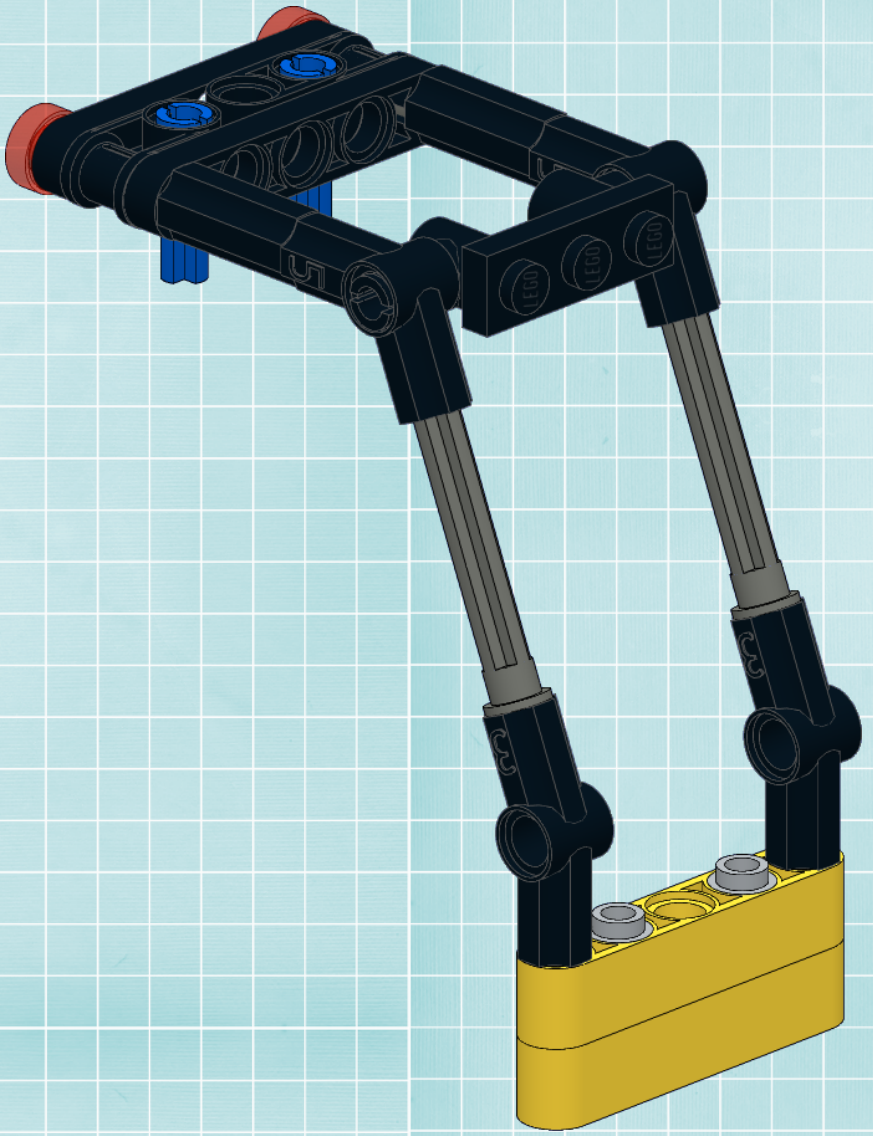

6

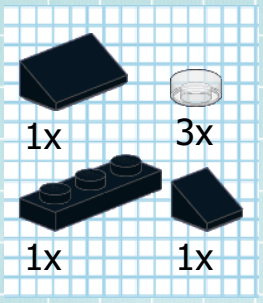

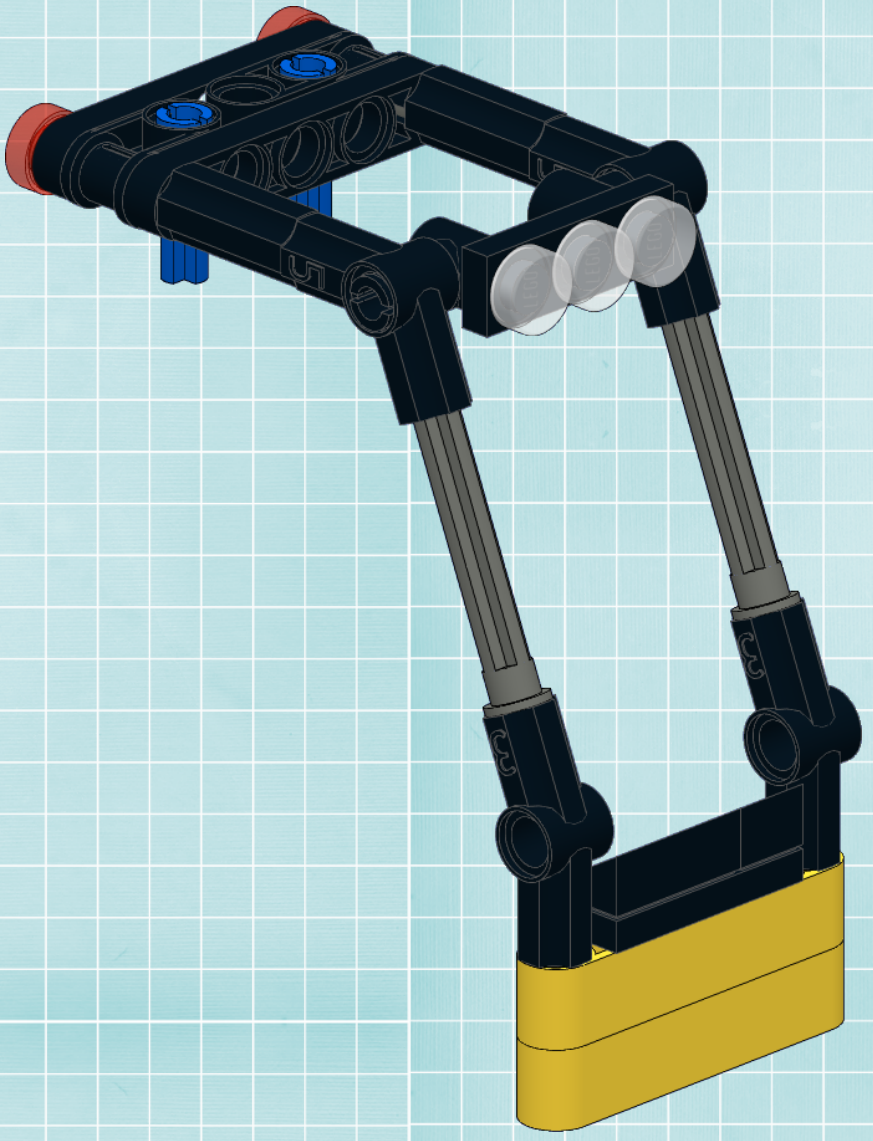

© M_Longer 2016

14

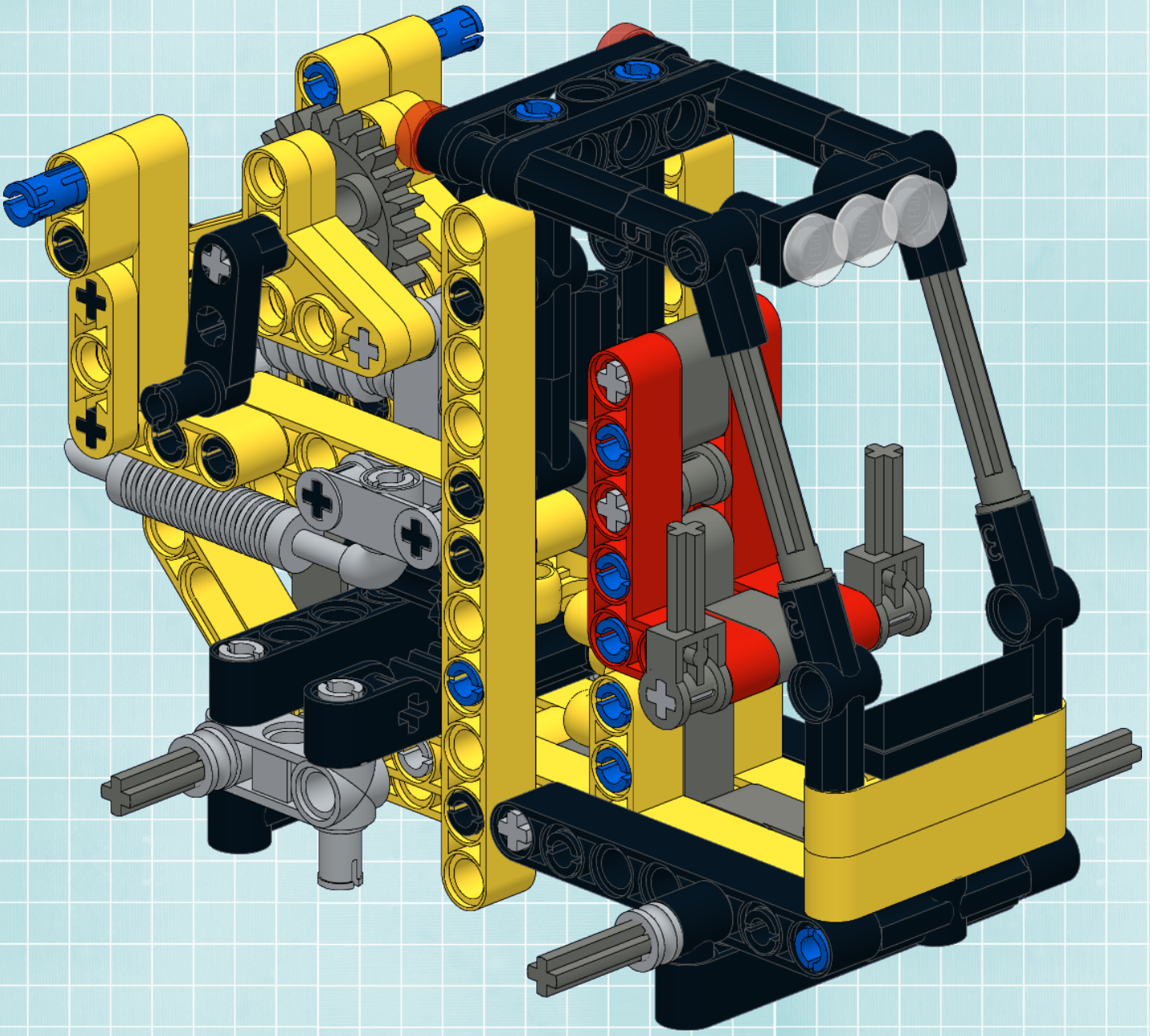

© M_Longer 2016

15

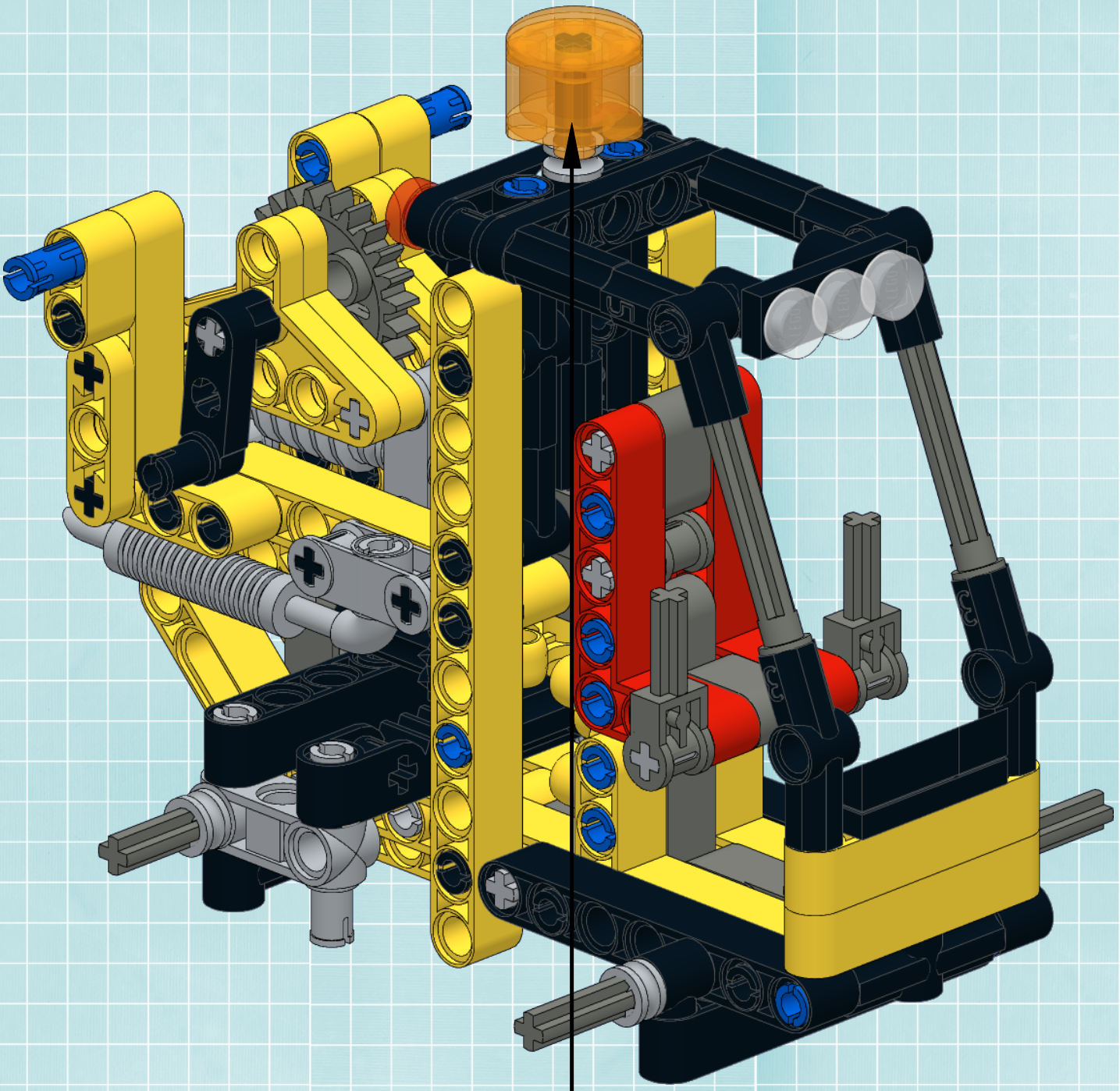

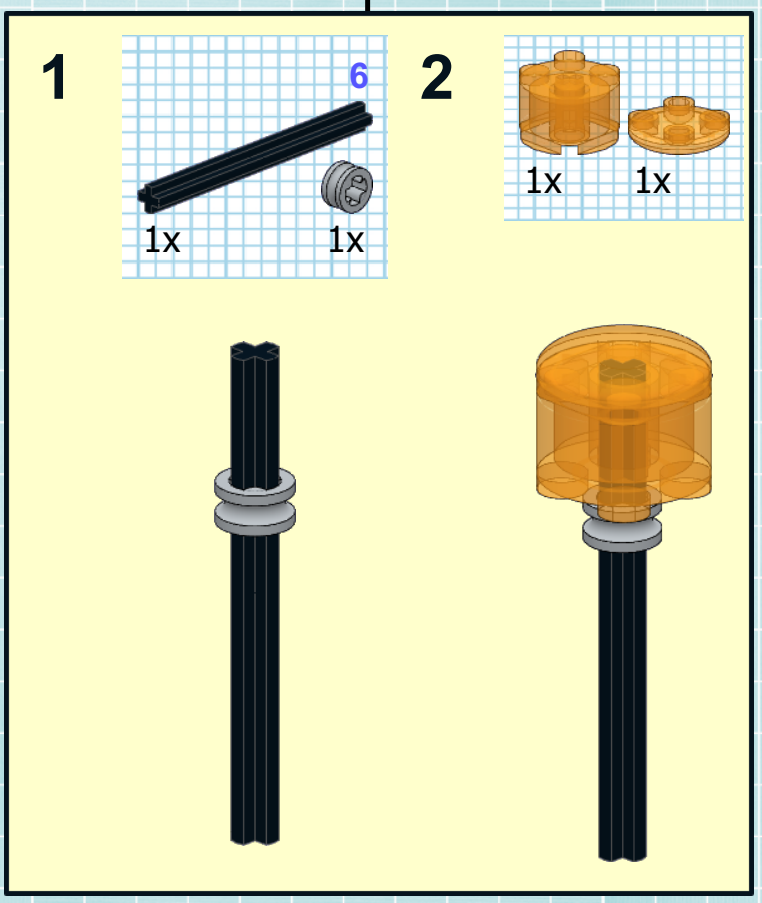

© M_Longer 2016

1

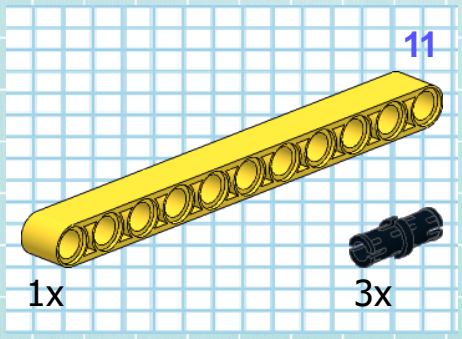

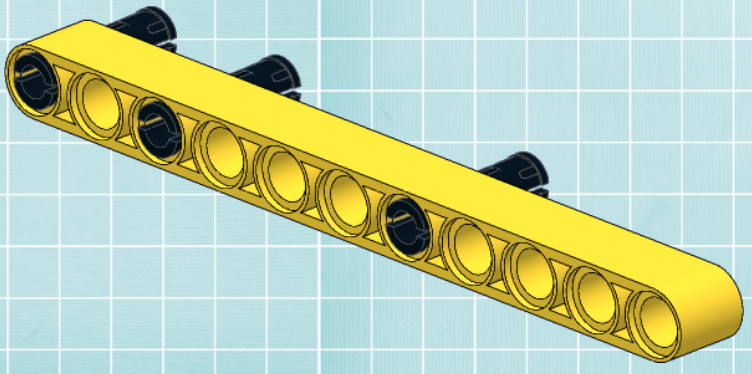

2

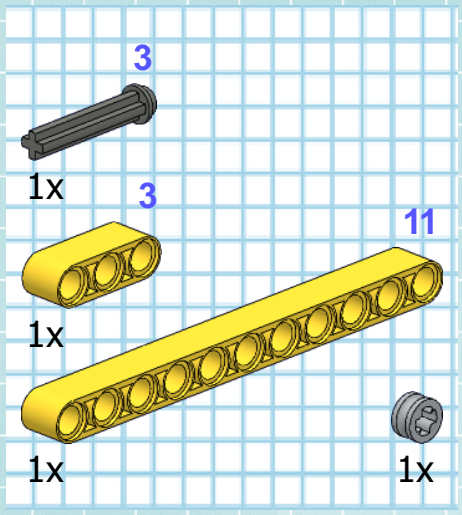

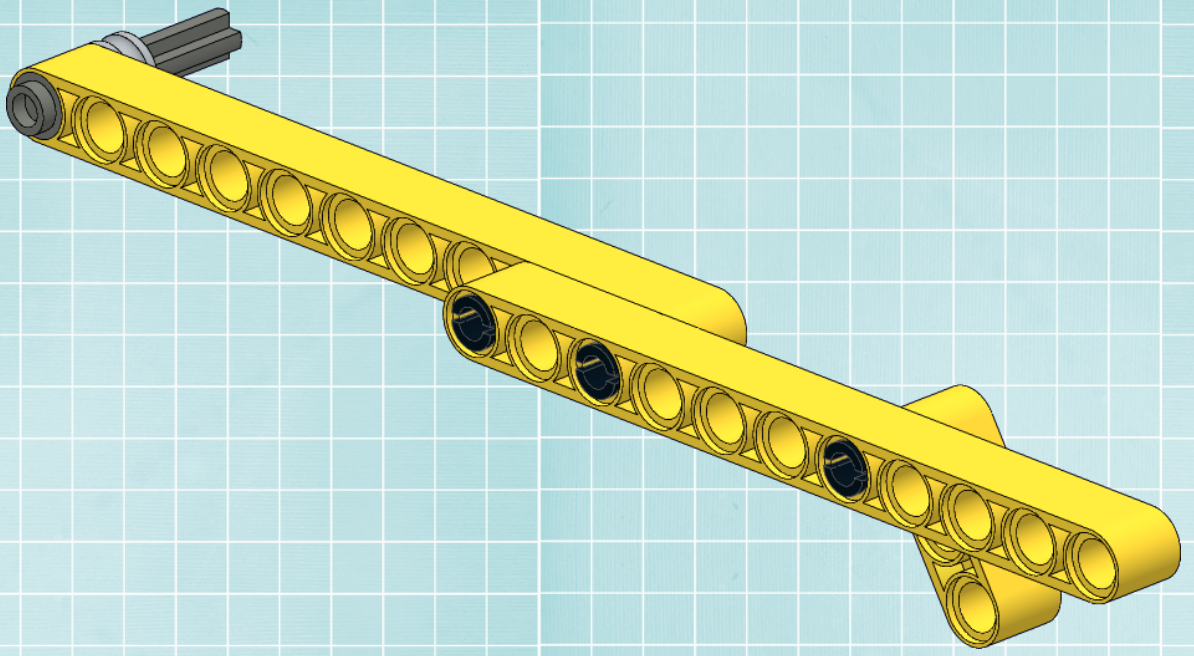

© M_Longer 2016

16

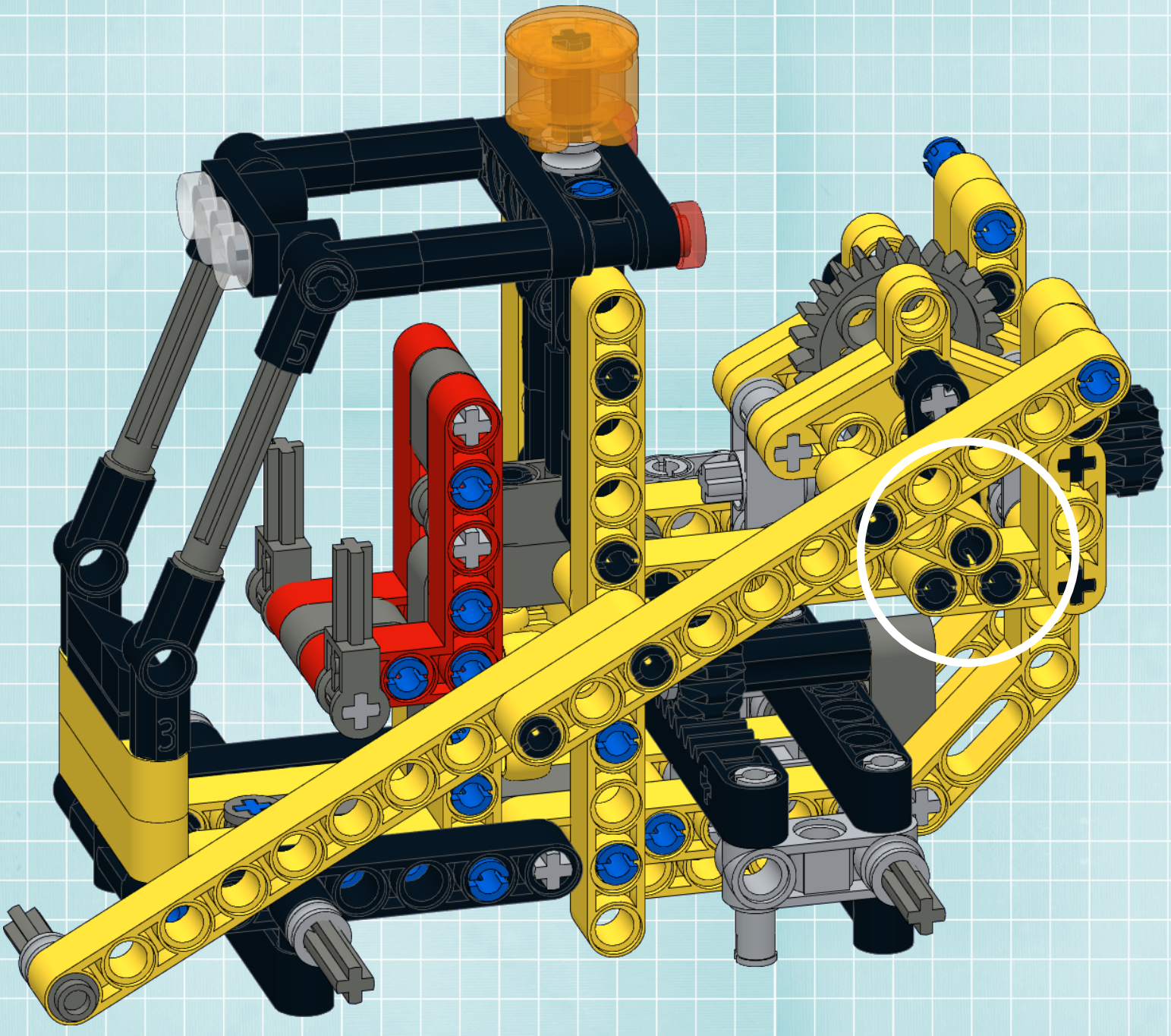

© M_Longer 2016

17

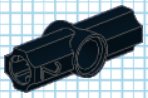

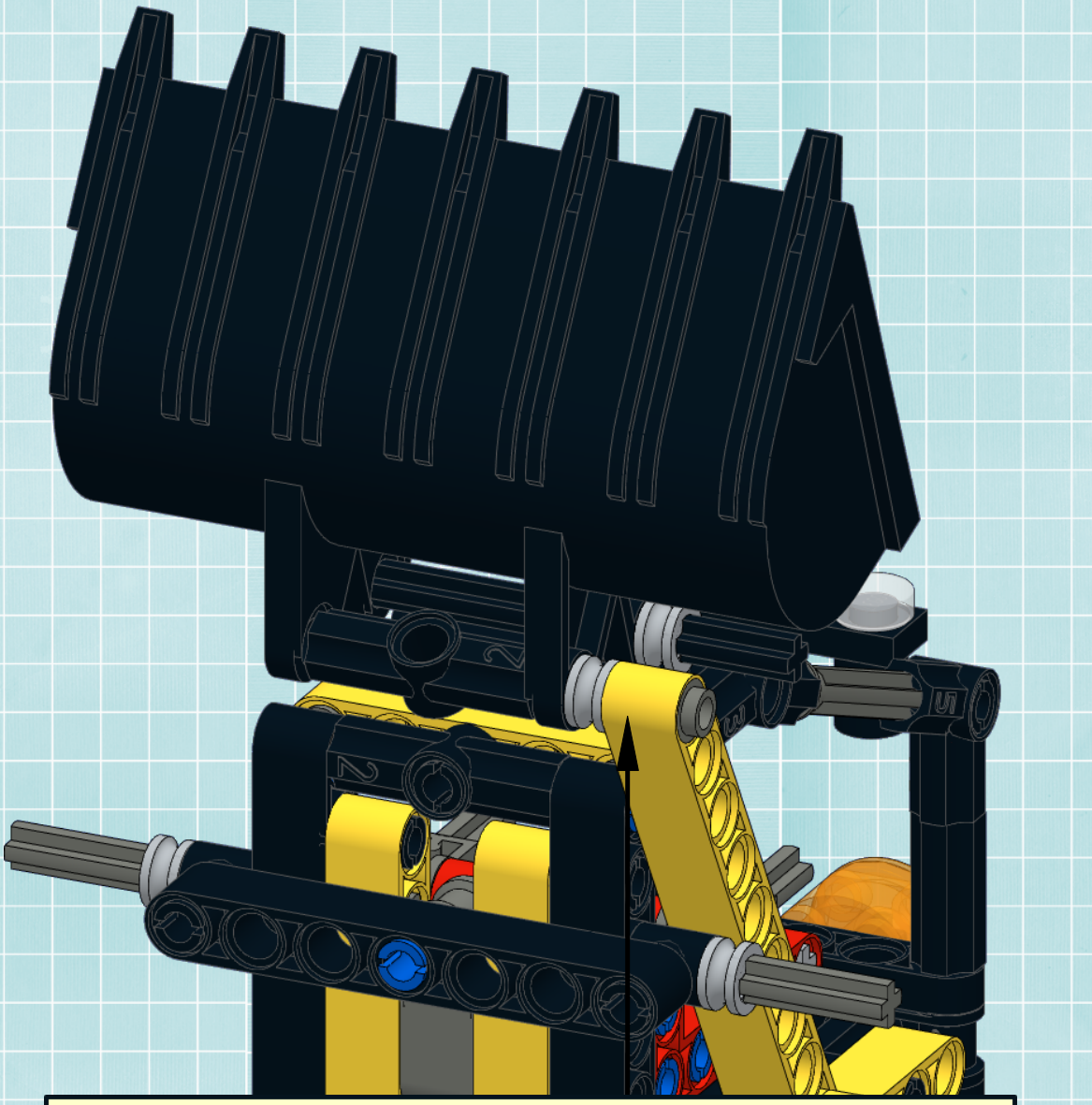

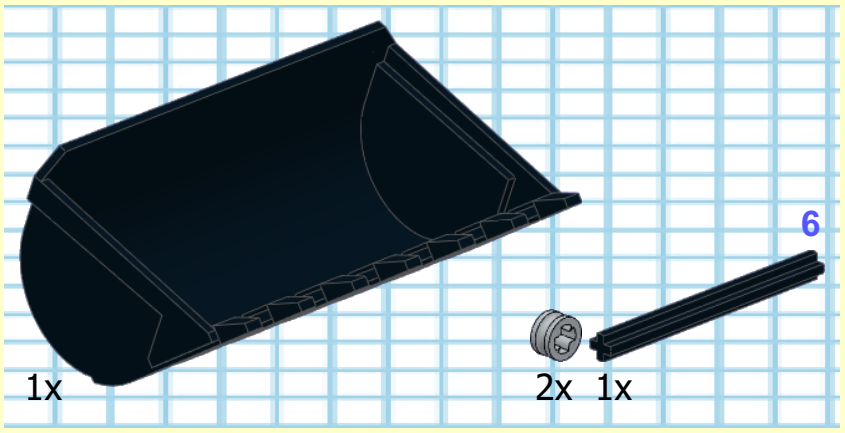

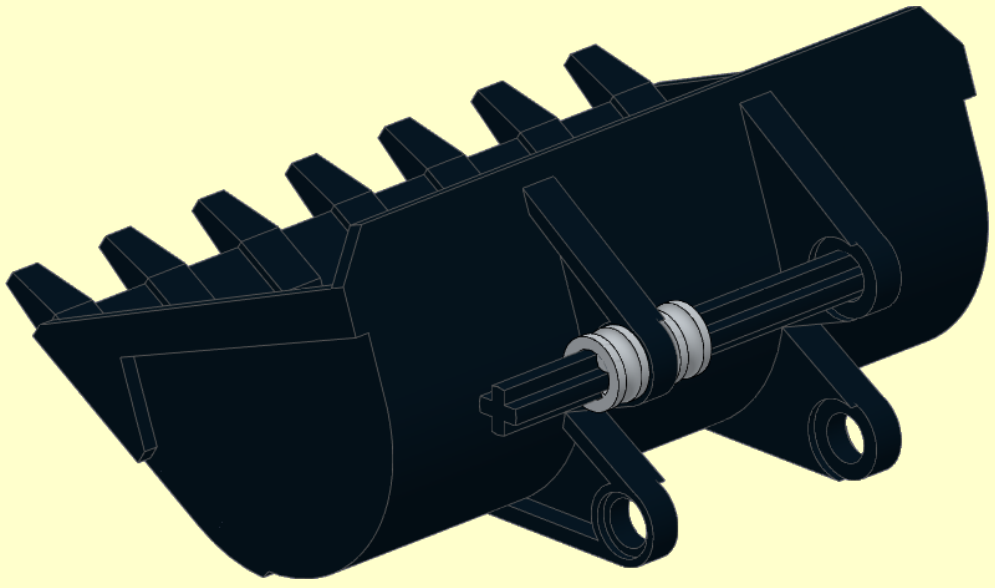

© M_Longer 2016

1

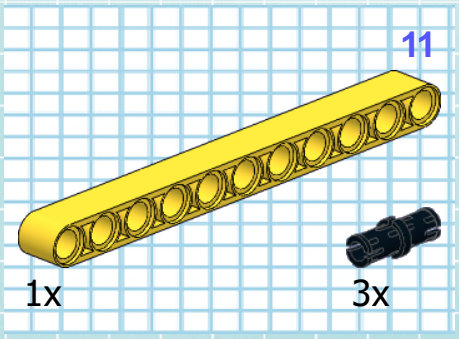

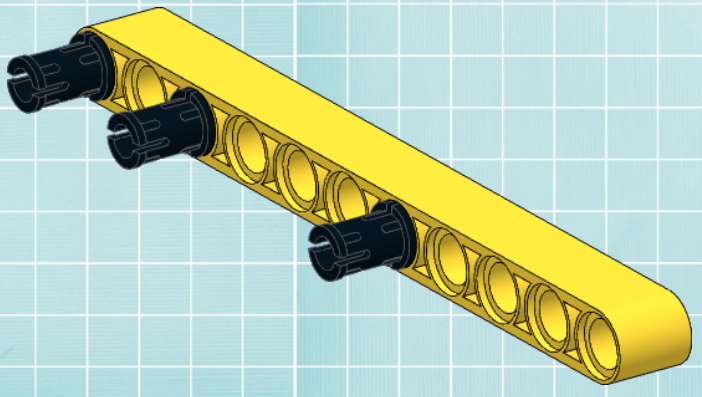

2

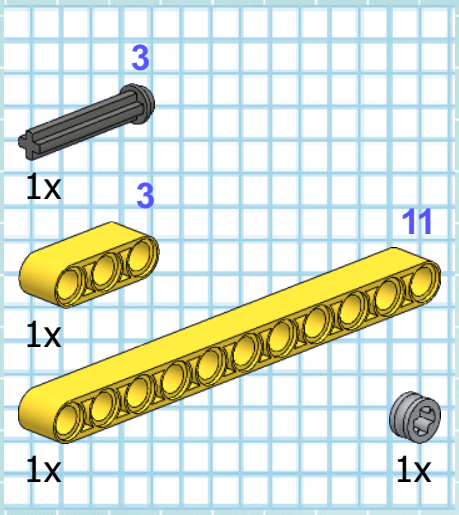

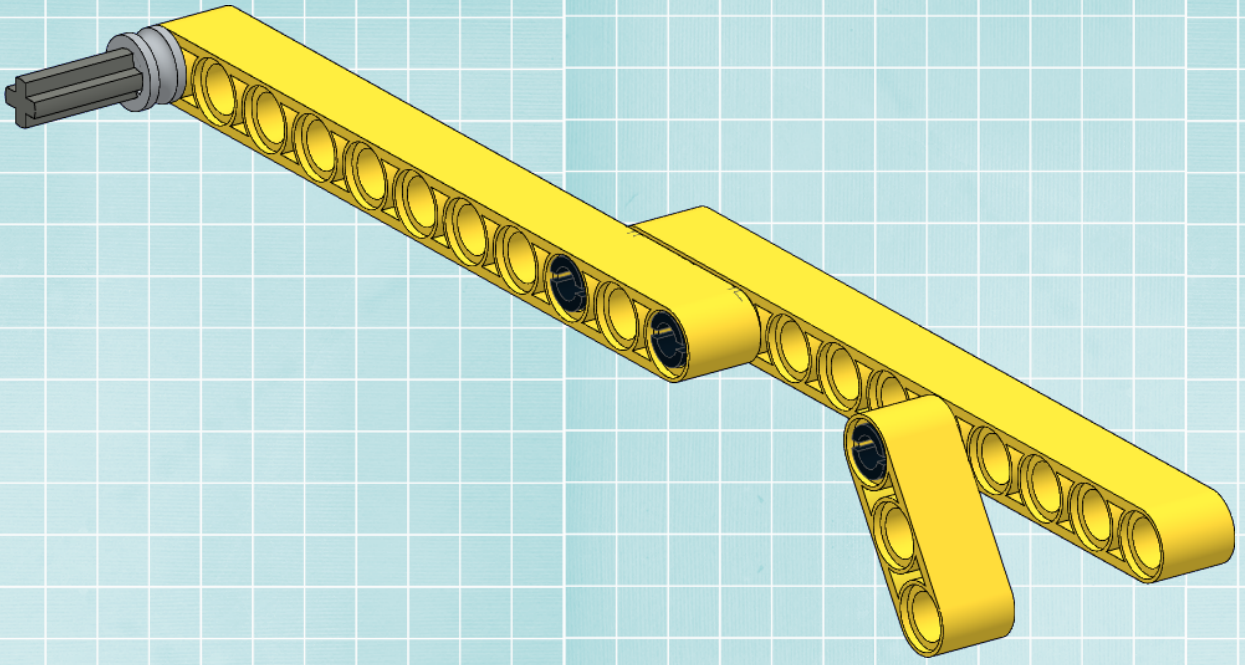

© M_Longer 2016

18

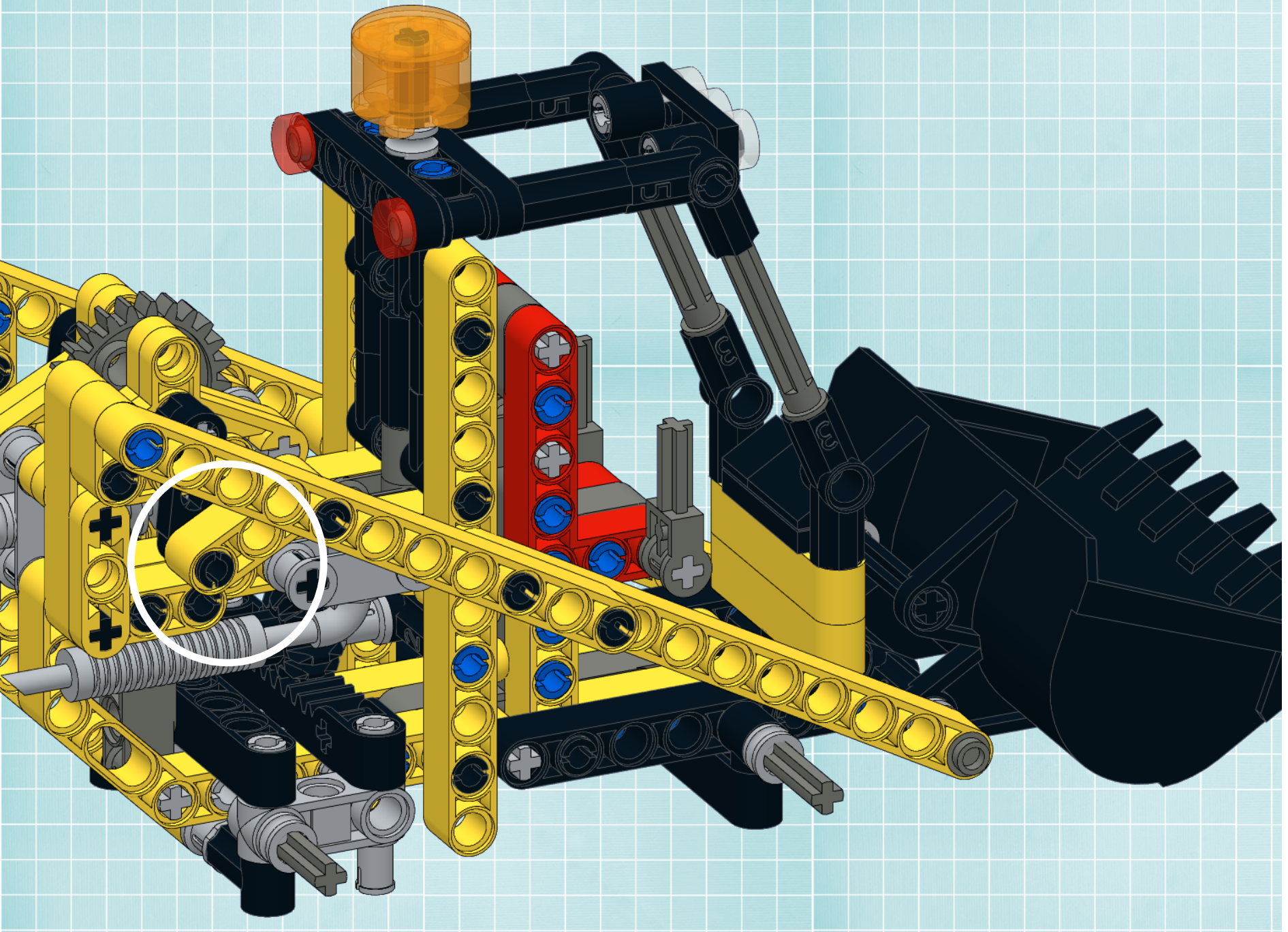

© M_Longer 2016

1

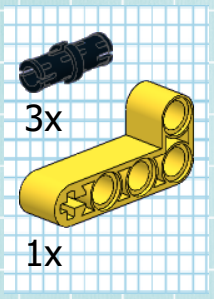

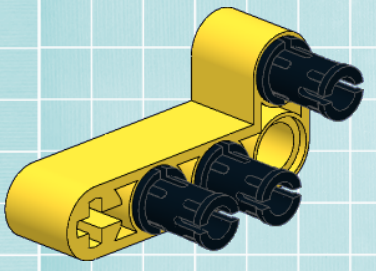

2

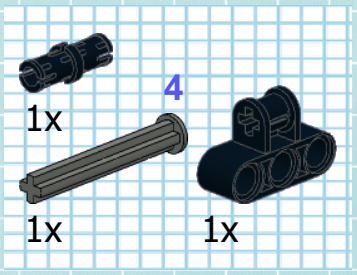

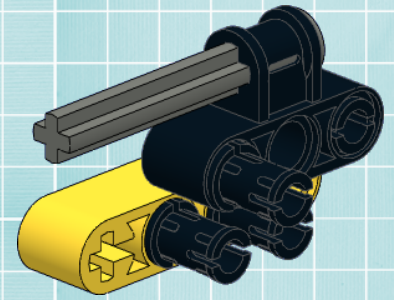

3

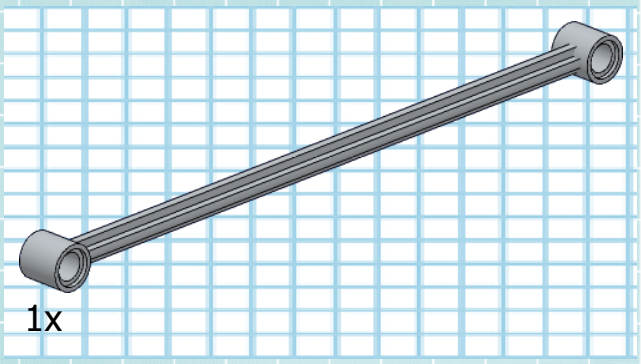

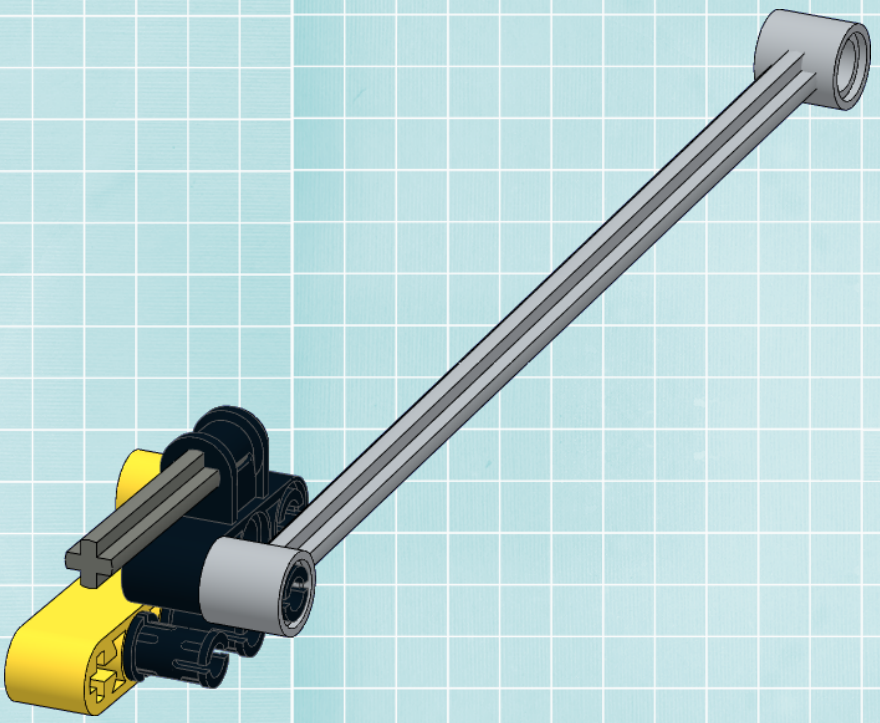

© M_Longer 2016

19

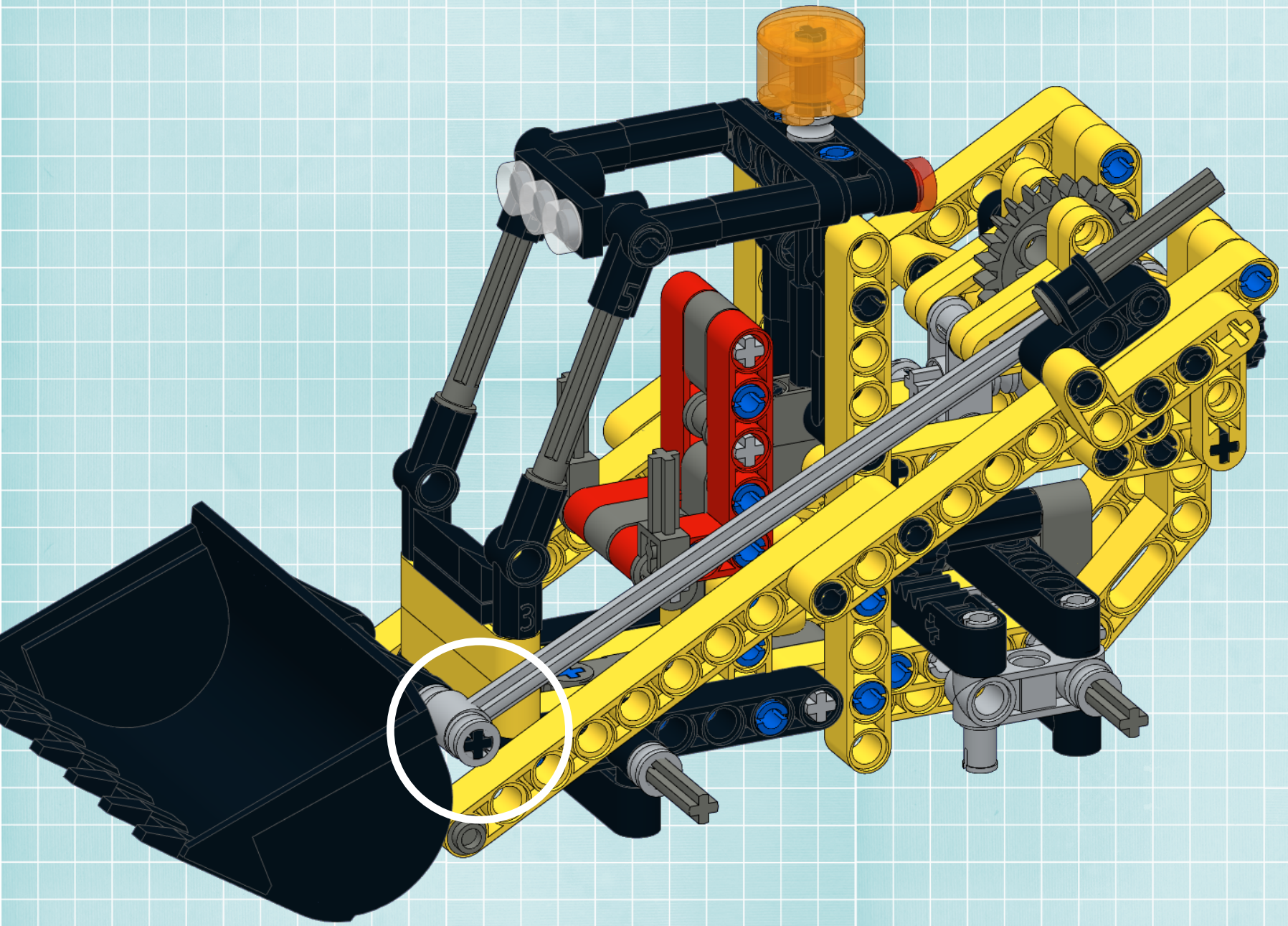

© M_Longer 2016

20

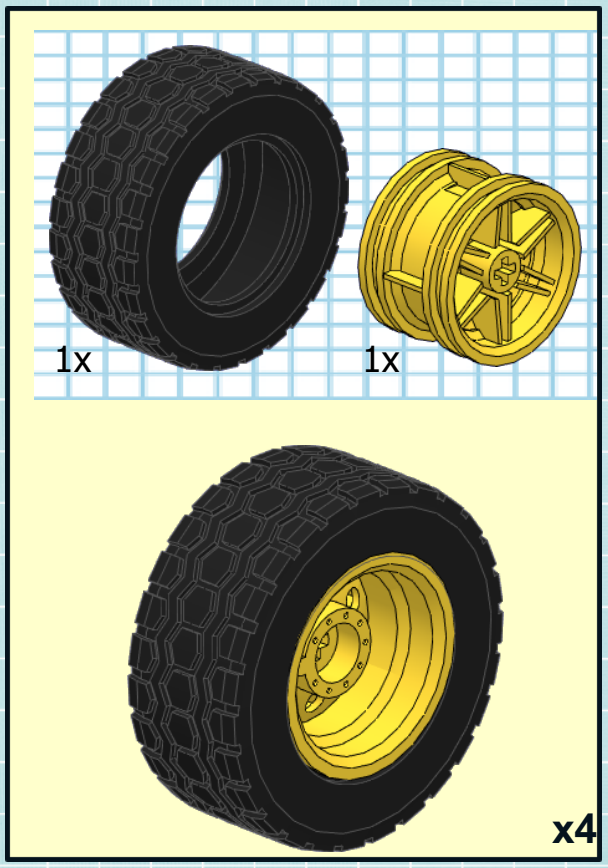

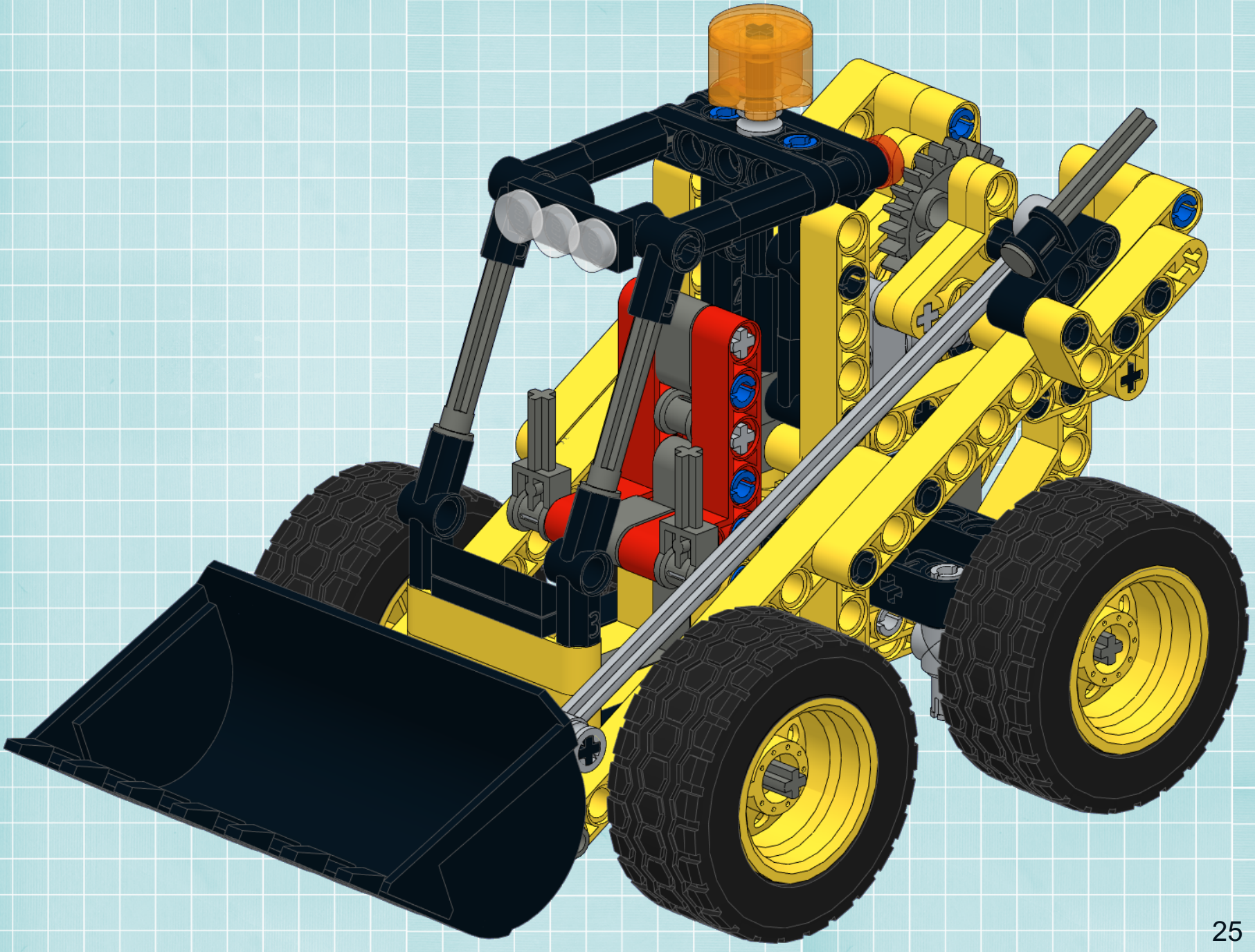

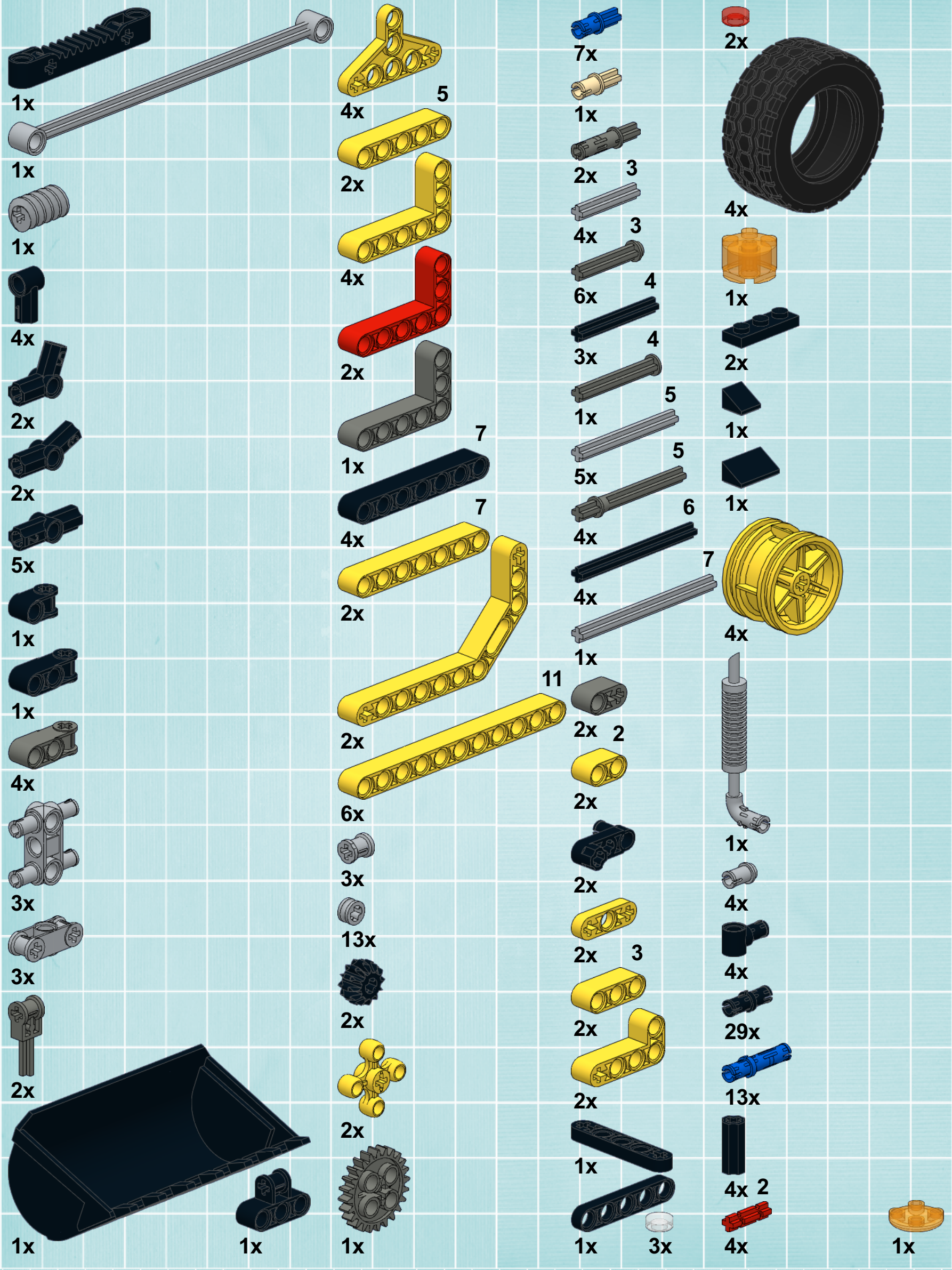

This instruction is released for free and may not be sold.
You are free to build and modify this model, but if you don't modify it, please do not claim authorship of this model :)